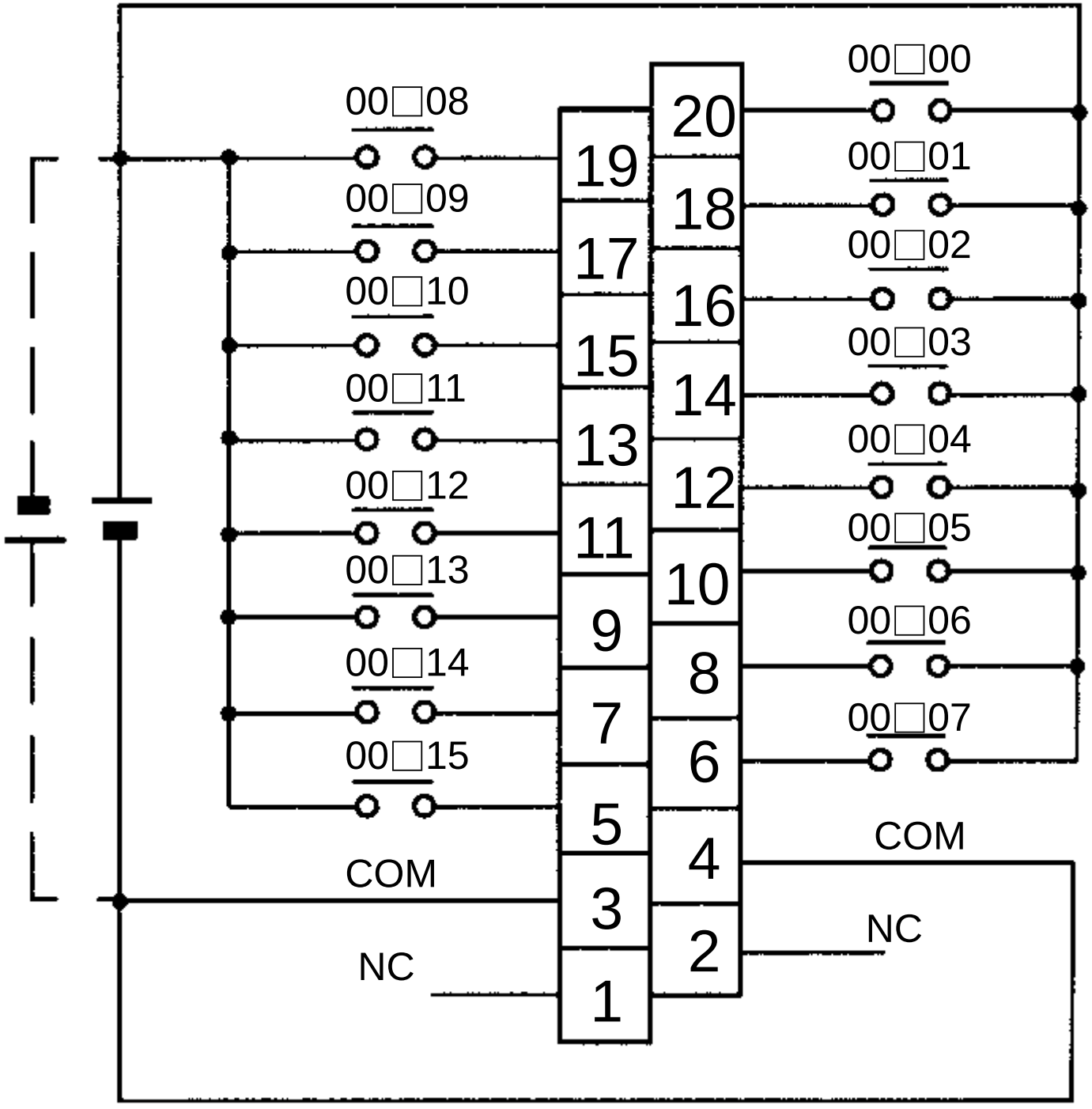Connecting Cable: G79-□C, G79-O□□C