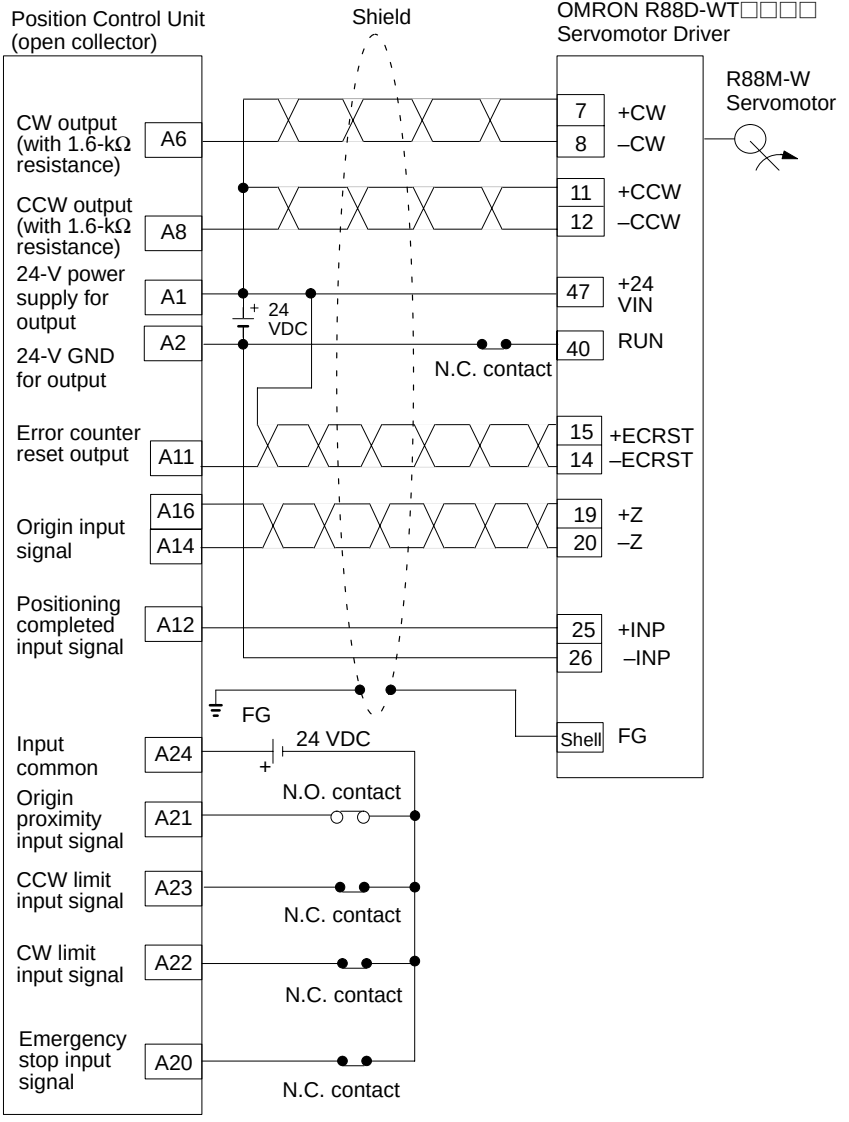
Position Control Unit
(open collector)
Shield
OMRON R88D-WT□□□□
Servomotor Driver
R88M-W
Servomotor
CW output
(with 1.6-kΩ
resistance)
A6
7
+CW
8
–CW
CCW output
(with 1.6-kΩ
resistance)
A8
11
+CCW
12
–CCW
24-V power
supply for
output
A1
+
24
VDC
47
+24
VIN
24-V GND
for output
A2
40
RUN
N.C. contact
Error counter
reset output
A11
15
+ECRST
14
–ECRST
A16
Origin input
signal
A14
19
+Z
20
–Z
Positioning
completed
input signal
A12
25
+INP
26
–INP
FG
Shell
FG
Input
common
A24
24 VDC
+
N.O. contact
Origin
proximity
input signal
A21
CCW limit
input signal
A23
N.C. contact
CW limit
input signal
A22
N.C. contact
Emergency
stop input
signal
A20
N.C. contact