CN2 (Inputs)
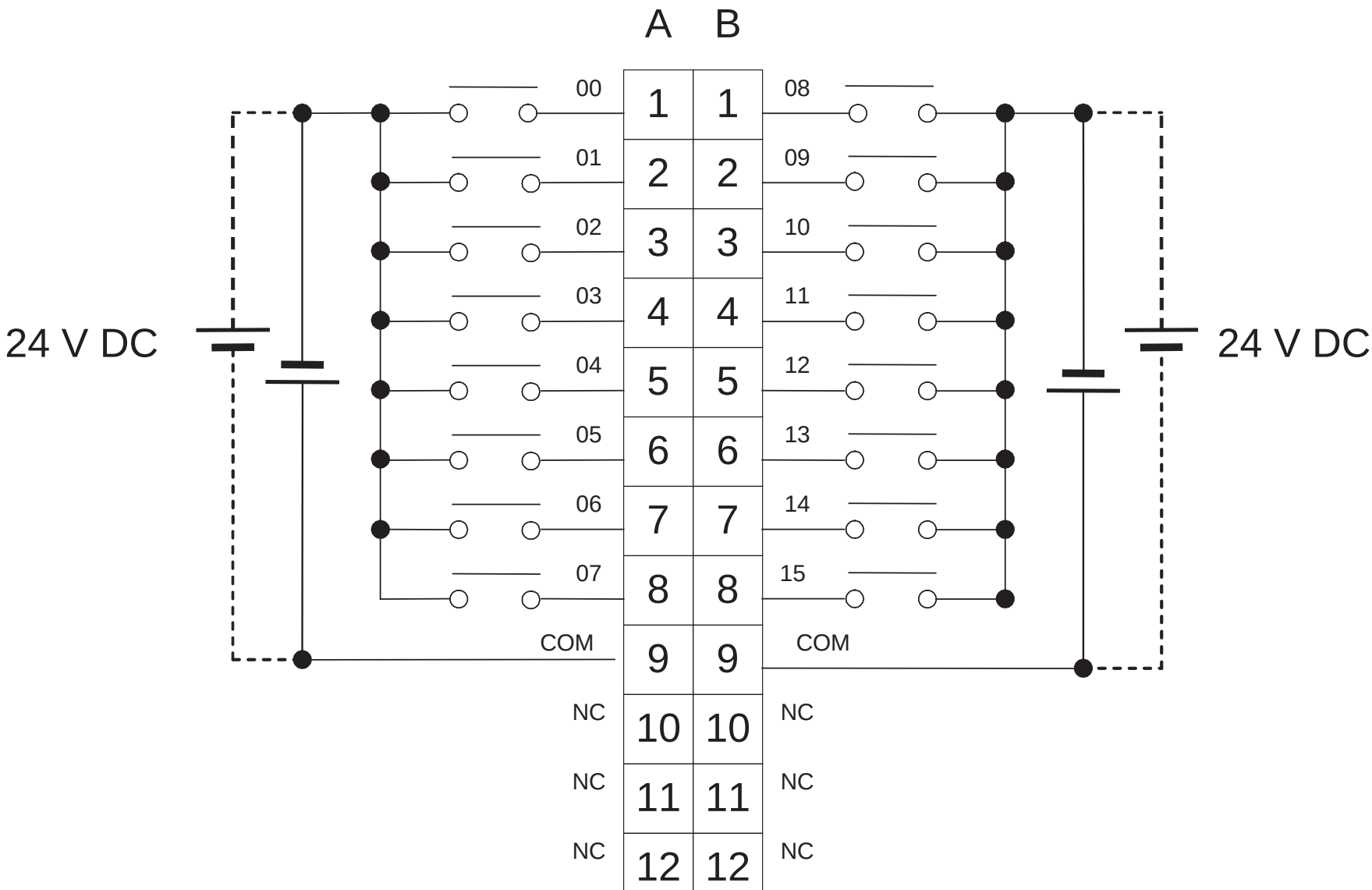
I/O word "m+1"