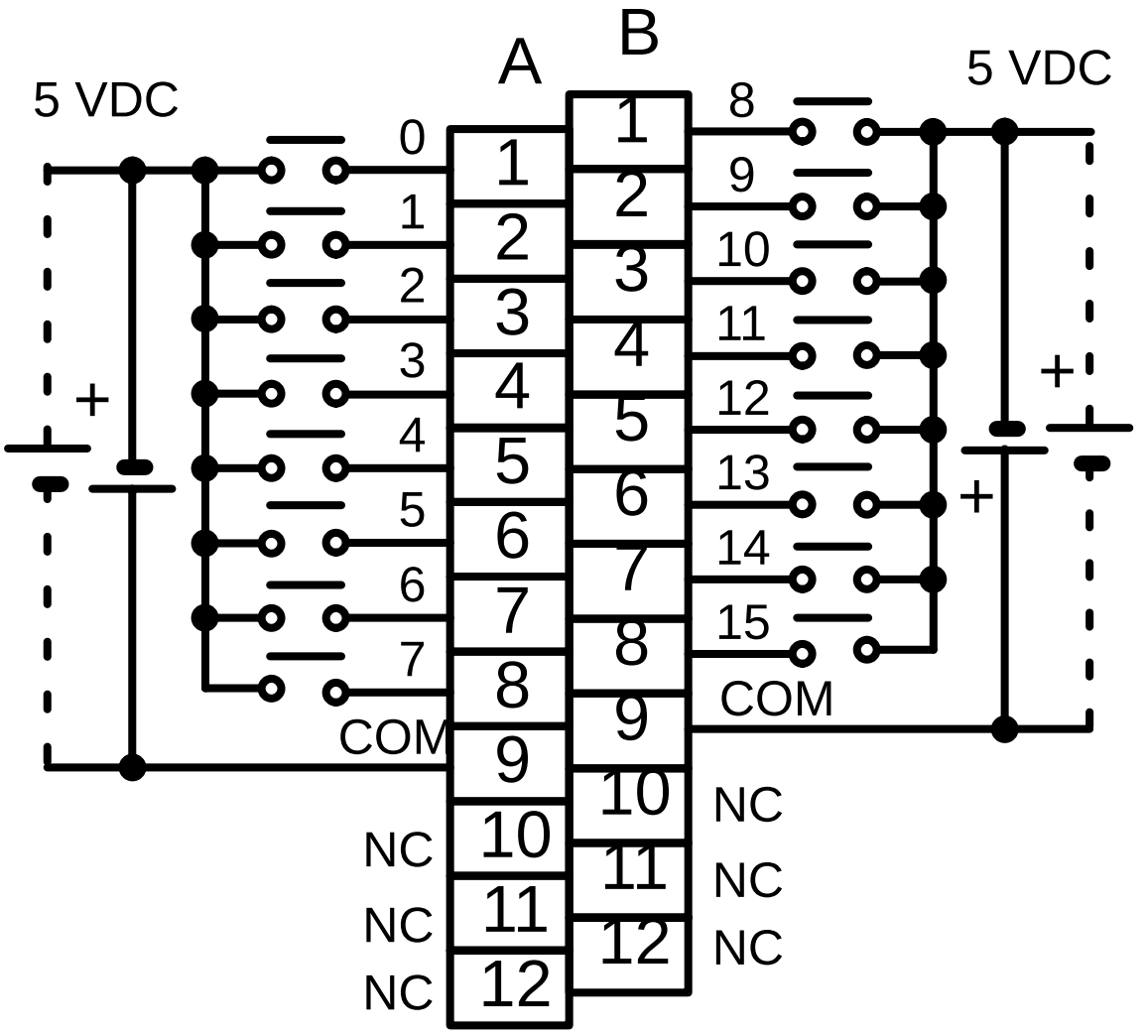

Use a sinking TTL buffer.
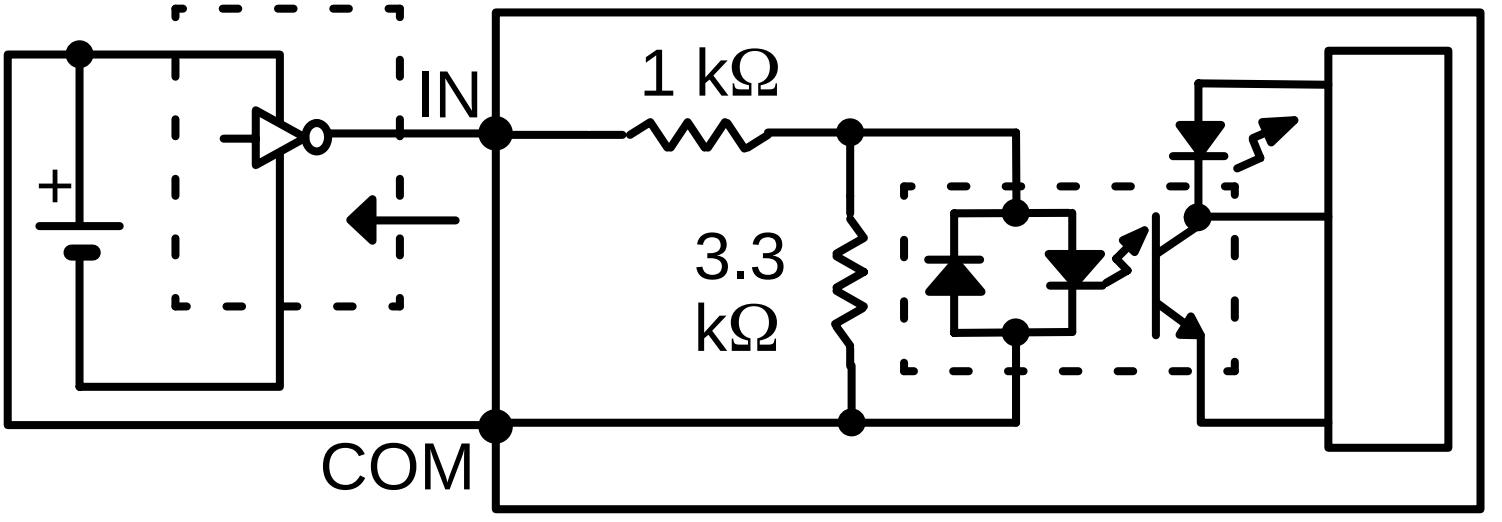
(TTL/LS-TTL/CMOS buffer)