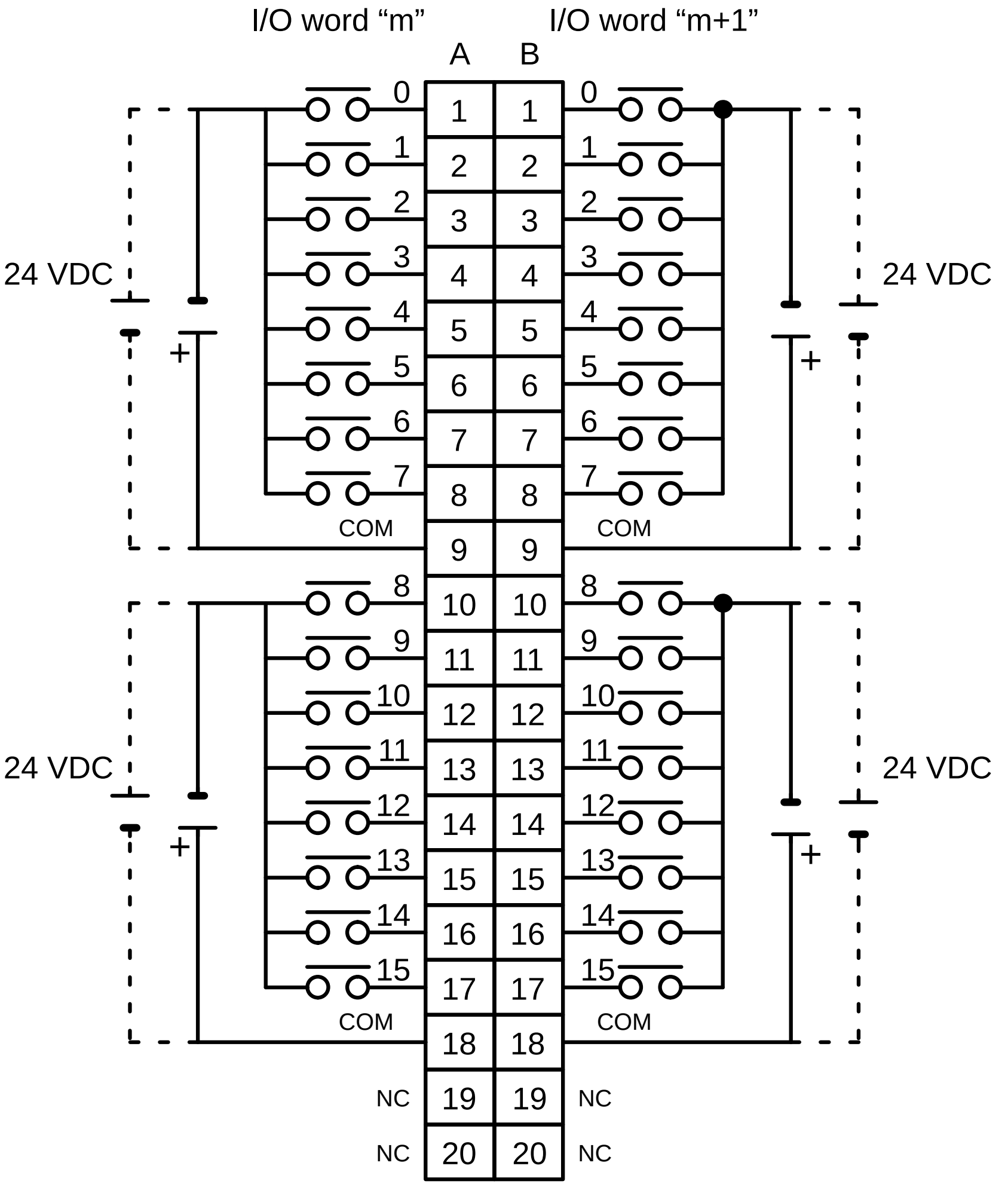
I/O word “m”
I/O word “m+1”
A
B
24 VDC
24 VDC
24 VDC
24 VDC
+
+
+
+
0
1
2
3
4
5
6
7
COM
8
9
10
11
12
13
14
15
COM
NC
NC
NC
NC