P2X-SERIES

Pushing power to the edge

THE COMPACTNESS OF A SMART CAMERA, THE POWER OF A VISION SYSTEM

The P2x-Series is an industrial smart camera providing exceptional inspection performance and flexibility in a fully-embedded compact housing. Powered by the 100+ inspection tools of IMPACT Machine Vision Software Suite, P2x-Series allows to tackle even the most complex application requirements.

CRISP IMAGES IN ANY CONDITION

P2x-Series Smart Cameras feature one of the most sophisticated optical designs available on the market. Top quality Micro-video and C-Mount lenses are both supported to deliver maximum image quality. Illuminator modules embed TIR lenses to convey the maximum amount of light onto the Field-of-View. Optical filters and special covers optimize the image quality by removing glare and unwanted reflections.

INTUITIVE VISUAL FEEDBACK

P2x-Series Smart Cameras are equipped with a stunning configurable 360° multi color visual feedback embedded in the illuminator module. Configurable through IMPACT Software, the color of the frame provides intuitive visual feedback to workers operating nearby even when no HMI is present. The highly visible 360° feedback alerts the user of inspection results even at far distances.

MAXIMUM INSPECTION ACCURACY AND REPEATABILITY

P2x-Series embedded 2 megapixel resolution imager enables high accuracy applications such as measurement or robot guidance requiring precise part location. In addition, P2x-Series is available with color CMOS imager and features a brand new set of color inspection tools to solve the most demanding applications requiring accurate color analysis.

FULLY INTEGRATED IN THE DATALOGIC MACHINE VISION ECO-SYSTEM

P2x-Series Smart Camera is a complete vision system packed into an embedded compact housing. Unlike competitive smart cameras, IMPACT Software Suite has no limitations when running on P2x Smart Cameras. IMPACT configuration files are fully portable from one Datalogic hardware to the other, therefore users can create vision programs and select the vision device to use at the very end of the application feasibility analysis.

HIGHLIGHTS

- qHD (960x540) and 2MP (1920x1080) resolution imager options both available in monochrome and color
- Field interchangeable lenses, illuminators and filters
- Two embedded illuminator sizes: 14-LED compact and 36-LED high power both integrating TIR lenses to deliver maximum brightness onto the field of view available in 4 different colors (white, red, infrared and blue)
- High quality micro-video lenses available in four different focal lengths: 6, 8, 12.5 and 17.5mm
- C-Mount models for extended optical flexibility also supporting telecentric lens options
- Innovative 360° software configurable visual feedback
- Top industrial grade: -10...50°C (14 to 122° F) operating temperature, IP65/67 rating
- Powered by IMPACT software suite with 100+ inspection tools
- Web-based monitoring application supporting multiple hardware platforms
- Add-on licenses to run even the most advanced Datalogic algorithms

APPLICATIONS

Automotive
- Component assembling verification
- Dashboard inspection
- Electric fuse box inspection
- Robot guidance

Electronics
- Correct assembling verification
- Component alignment/positioning
- Robot guidance

Food & Beverage
- Lot number and best before date OCR reading
- Bottle cap inspection
- Packaging artwork verification
- Label position, orientation and color

Medical and Pharma
- Packaging/sealing verification
- GTIN, serial and batch number OCR reading
- Medical device assembly control
- Vial in tray counting
- Flip-off cap inspection

TECHNICAL DATA

	P20M	P20C	P22M	P22C
Imager sensor	CMOS with Global Shutter			
Mono/Color	Monochrome	Color	Monochrome	Color
Resolution	qHD (960 x 540 pixels)		2MP (1920 x 1080 pixels)	
Sensor frame rate	60 frames/s			
Pixel size	5.6 µm square		2.8 µm square	
Digital OUT	OUT 1 and 2: NPN or PNP short circuit protected, opto-isolated only when connected to CBX500/800 OUT 3: NPN or PNP short circuit protected, Opto-isolated only when connected to CBX800 (Strobe signal is shared with Output 3. Output 3 is active only if the External Strobe is disabled)			
Digital IN	IN 1 (external trigger) and IN 2: opto-isolated and polarity insensitive (Max voltage: 30 Vdc, Max Input current: 10mA)			
Led indicators	Power, Busy/Trigger, Out 1; Out 2; Out 3, Online			
Keypad Button	Reset; Camera Button Event (internal software event only); Loader			
Ethernet	1000 Mbit/s (supports application protocols: TCP/IP, EtherNet/IP, Profinet IO, Modbus TCP, MC protocol)			
RS232	2400 to 115200 bit/s			
RAM	1 GB			
Storage	380 MB			
Lens options	Micro-video lens: 6mm / 8mm / 12.5mm / 17.5mm C-Mount: 4mm / 6mm / 8mm / 12mm / 16mm / 25mm / 35mm / 50mm			
Lens focusing	Mechanical with focusing screw (Micro-video lens models) Manual (C-Mount models)			
Illuminators	Illuminator colors: White, Red, Infrared, Blue Illuminator power: High Power 14 LEDs, Very High Power 36 LEDs			
LED safety	According to EN 62471			
Filters	Bandpass (red, blue, IR), YAG cut, IR cut, UV cut			
Polarizing Filter	Yes, with dedicated polarizer front cover accessory			
Power supply	24 Vdc ± 10%			
Max power consumption	14 LEDs illuminator: 0.42 A, 10 W max 36 LEDs illuminator: 0.62 A, 15 W max			
Operating temperature	-10° to 50° (14 to 122° F)			
Storage temperature	-20° to 70°C (-4 to 158°F)			
Max humidity	90% non condensing			
Vibration Resistance EN 60068-2-6	14 mm @ 2 to 10 Hz; 1.5 mm @ 13 to 55 Hz; 2 g @ 70 to 500 Hz; 2 hours on each axis			
Bump Resistance EN 60068-2-29	30g; 6 ms; 5000 shocks on each axis			
Shock Resistance EN 60068-2-27	30g; 11 ms; 3 shocks on each axis			
Protection Class EN 60529	IP65/67			
Case Material	Aluminium case and plastic protective window cover			
Dimensions (H x W x L) with lens cover	14 LEDs illuminator: 109 x 54 x 56mm (4.3 x 2.1 x 2.2in.) 36 LEDs illuminator: 116 x 126 x 70mm (4.6 x 4.9 x 2.8in.)			
Dimensions with heat sink (H x W x L)	108.7 x 54 x 62.5 mm (4.28 x 2.13 x 2.46 in.) – Micro-video Lens 14L ill. 115.5 x 126x77.3 mm (4.55 x 4.96 x4.91 in.) - Micro-video Lens 36L ill. 108.7 x 54 x 108.3 mm (4.27 x 2.12 x 4.26 in.) – C-Mount w/o ill. 115.5 x 126x124.8 mm (4.55 x 4.96 x 4.91 in.) – C-Mount 36L ill.			
Weight	about 380g. (13.4 oz.) – Micro-video Lens 14L ill. about 640g. (22.5 oz.) - Micro-video Lens 36L ill. about 300g. (10.6 oz.) – C-Mount w/o ill. about 900g. (31.7 oz.) – C-Mount 36L ill.			
Warranty	2-Year Factory Warranty			

ILLUMINATORS

Blue White **Red** Infrared

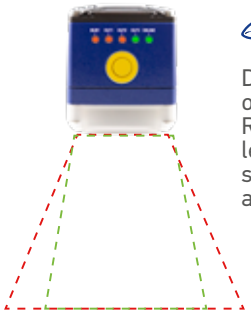

Different options of Total Internal Reflection (TIR) LED lenses to match smart camera lens aperture

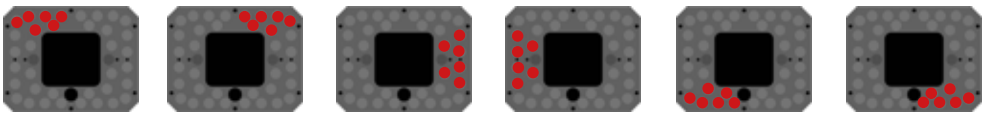

Software configurable lighting segments to optimize image brightness on the Field-of-View

FILTERS

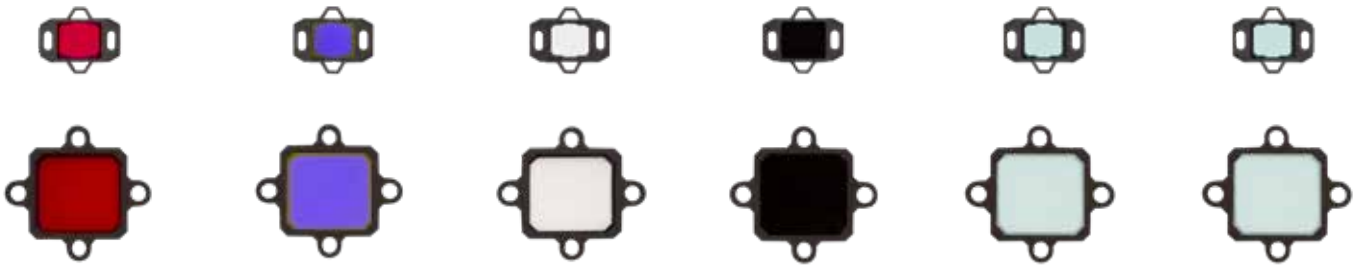

Red bandpass | Blue bandpass | UV-cut | IR bandpass | YAG-cut | IR-cut

COVERS

STANDARD | ESD | POLARIZED | HARSH ENVIRONMENT

LENSES

MICRO VIDEO LENSES

P2X-SERIES FIELD OF VIEW (H x V in mm)				
OPERATING DISTANCE (mm)	6 mm	8 mm	12.5 mm	17.5 mm
50	67 x 37	46 x 26	24 x 13	
100	117 x 66	82 x 46	46 x 25	31 x 17
200	218 x 122	155 x 87	90 x 49	62 x 35
300	318 x 179	227 x 128	133 x 73	93 x 52
400	419 x 236	300 x 169	177 x 96	124 x 70
500	519 x 292	373 x 209	220 x 120	155 x 87
600	620 x 349	445 x 250	263 x 144	185 x 104
700	720 x 405	518 x 291	307 x 167	216 x 121
800	821 x 462	590 x 332	350 x 191	247 x 139
900	921 x 518	663 x 373	394 x 214	277 x 156
1000	1022 x 575	735 x 414	437 x 238	308 x 173
1100		808 x 454	480 x 262	339 x 190
1200		880 x 495	524 x 285	369 x 208
1300			567 x 309	400 x 225
1400			611 x 333	431 x 242
1500			654 x 357	461 x 259

6 mm 8 mm 12,5 mm 17,5 mm

C-MOUNT LENSES

P2X-SERIES FIELD OF VIEW (Horizontal in mm)							
WORKING DISTANCE (mm)	4 mm	6 mm	8 mm	12 mm	16 mm	25 mm	35 mm
50	121	81	67	47			
100	188	126	100	69			
200	323	216	167	114	89	55	39
300	457	305	234	159	123	77	54
400	591	395	302	203	156	98	69
500	726	484	369	248	190	120	85
600	860	574	436	293	233	141	100
700	995	664	503	338	257	163	115
800	1129	753	570	383	291	184	131
900	1263	843	638	427	324	206	146
1000	1398	932	705	472	358	227	162
1100		1022	772	517	391	249	177
1200		1112	839	562	425	270	192
1300		1201	906	606	459	292	208
1400		1291	974	651	492	313	223
1500		1380	1041	696	526	335	238
1600				741	559	356	254
1700				786	593	378	269
1800				830	627	399	284
1900				875	660	421	300
2000				920	694	442	315
2500					862	550	392

DIMENSIONS

P2X-SERIES MICRO-VIDEO 14 LED ILLUMINATOR - STRAIGHT 0° CONNECTORS

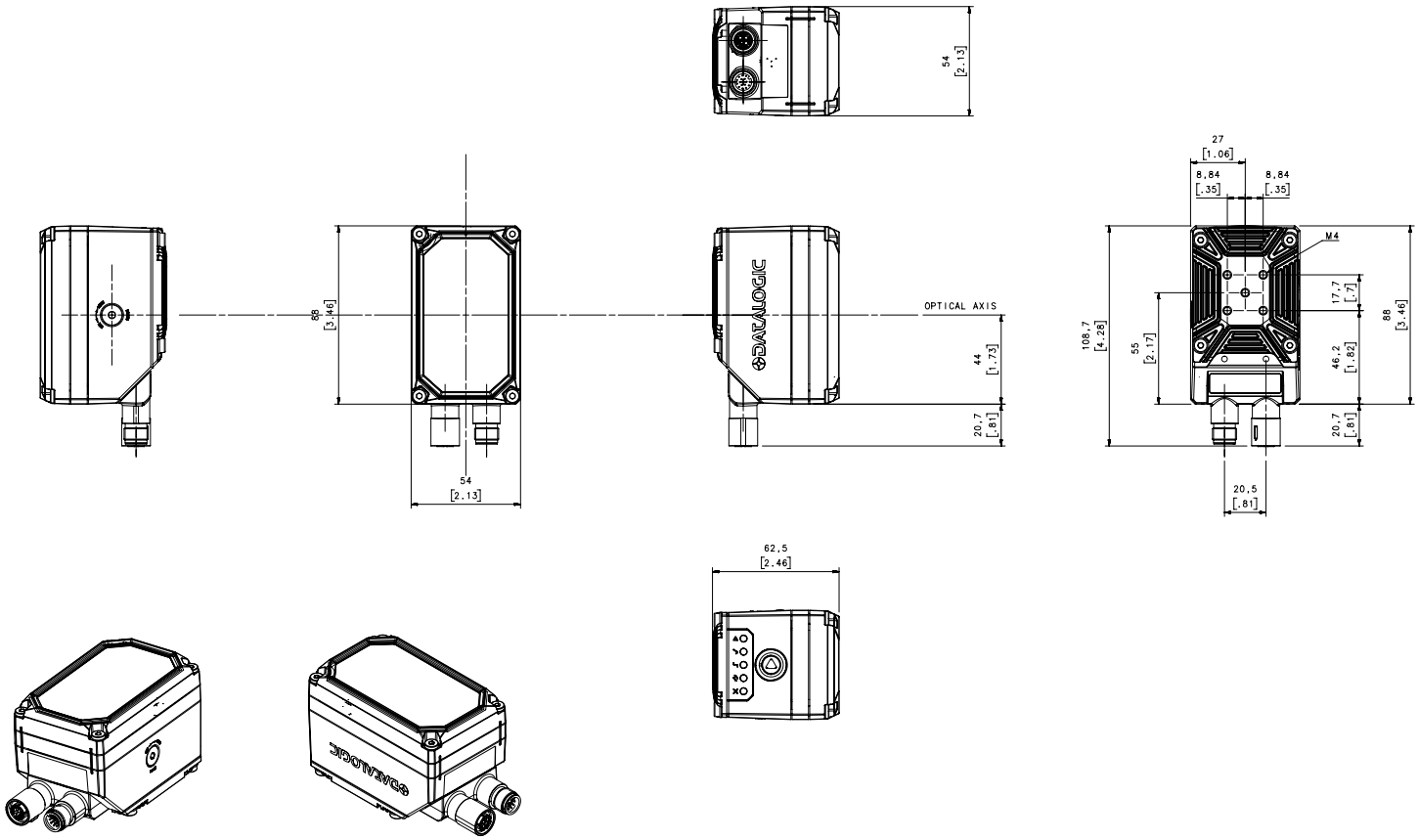

P2X-SERIES MICRO-VIDEO 14 LED ILLUMINATOR - 90° CONNECTORS

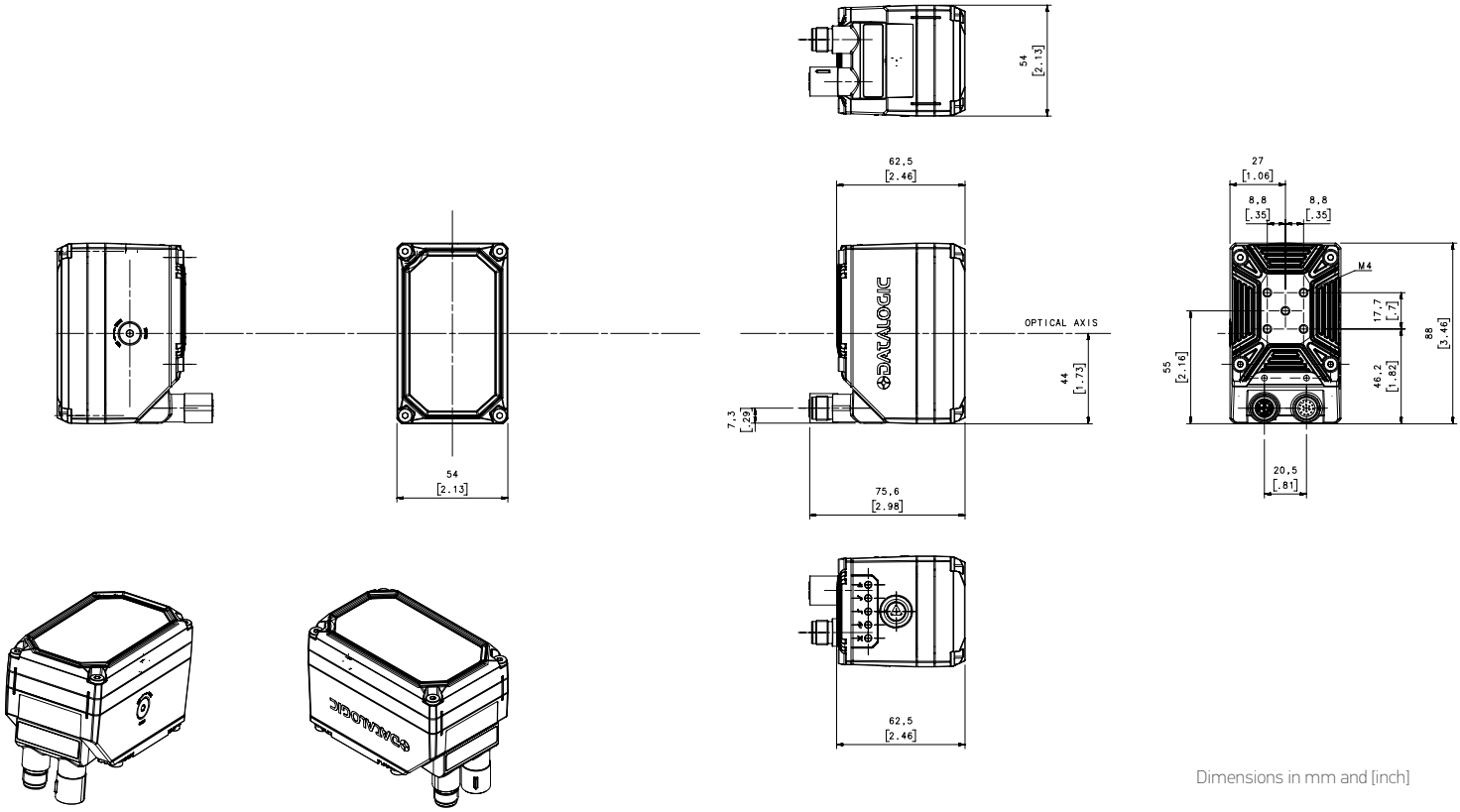

Dimensions in mm and [inch]

P2X-SERIES MICRO-VIDEO 36 LED ILLUMINATOR - STRAIGHT 0° CONNECTORS

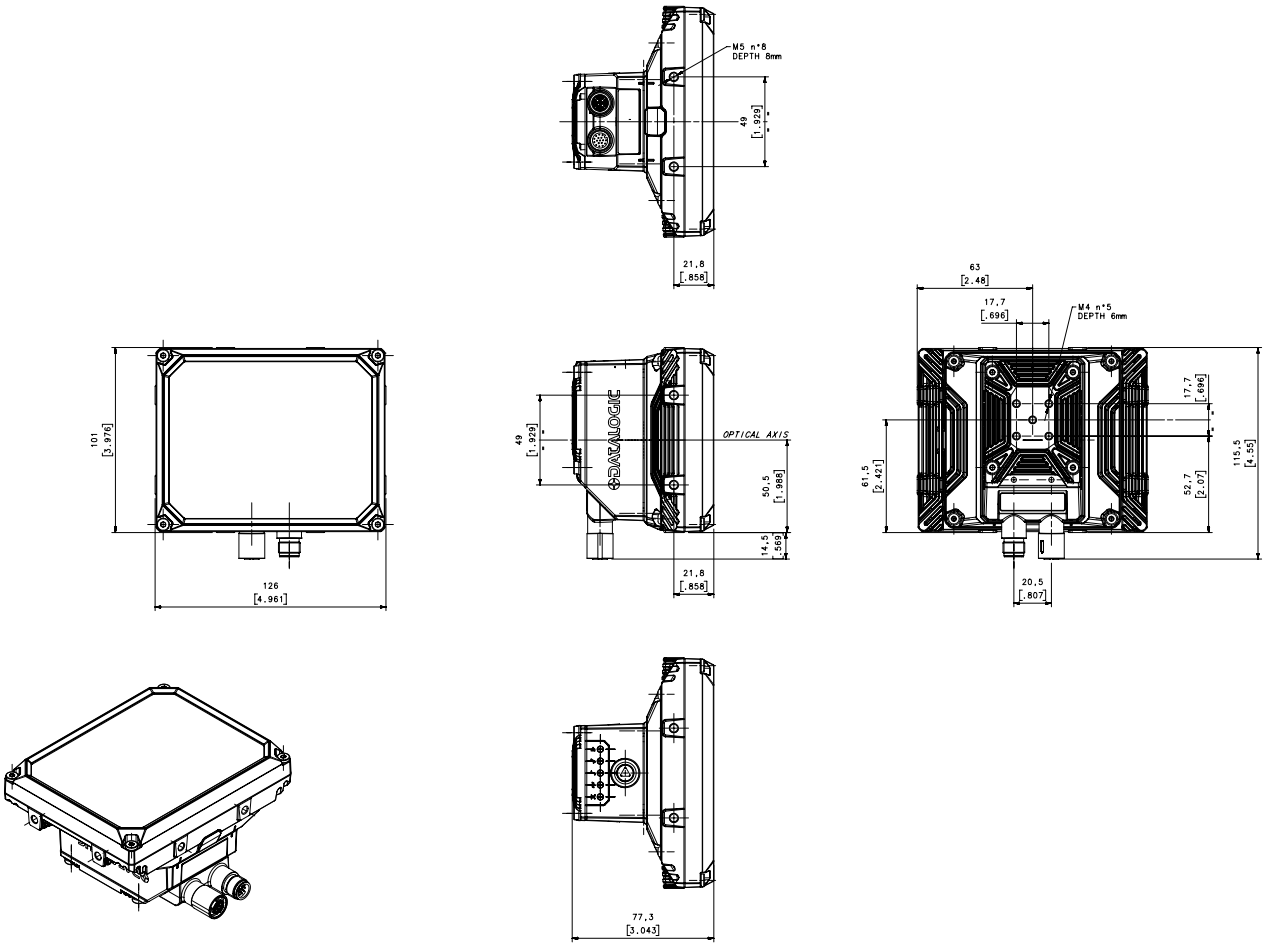

P2X-SERIES MICRO-VIDEO 36 LED ILLUMINATOR - 90° CONNECTORS

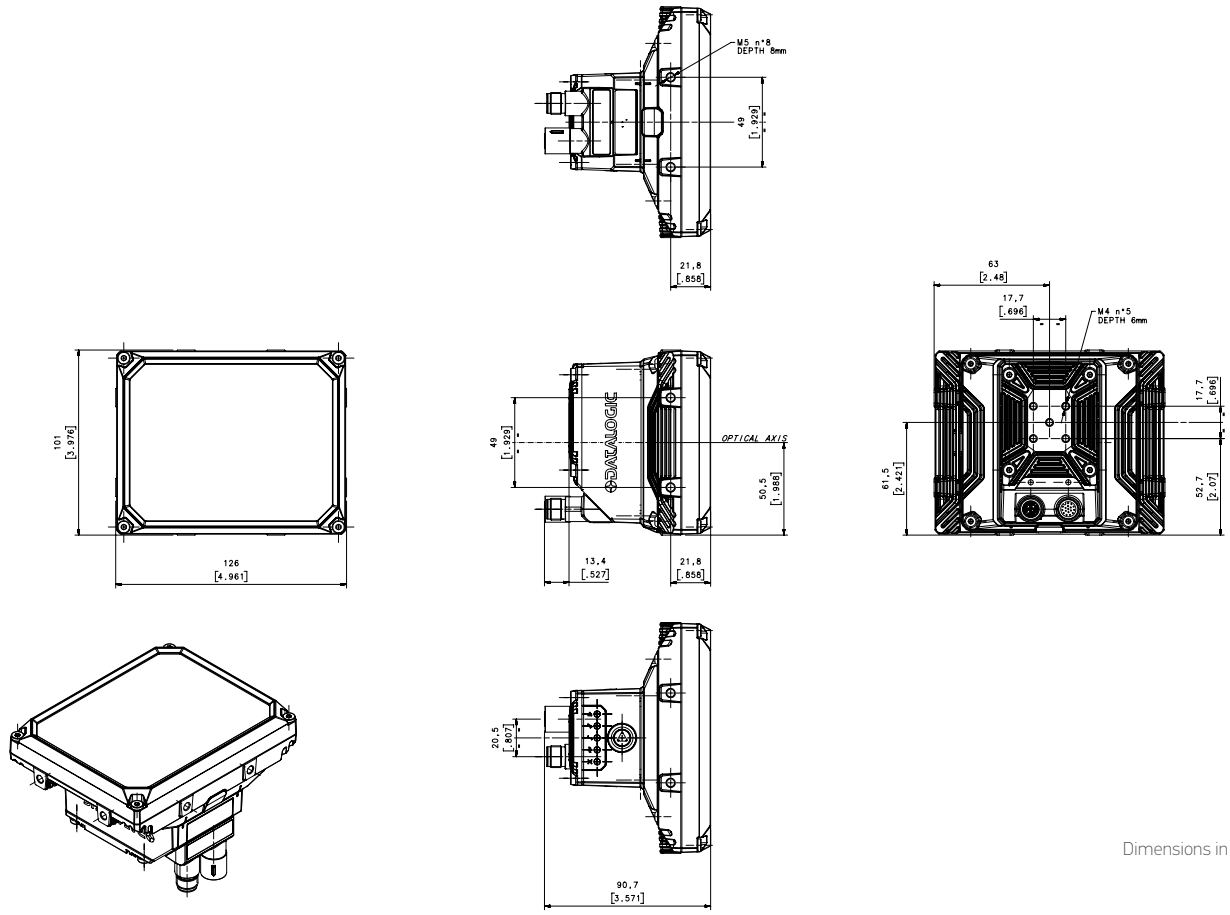

Dimensions in mm and [inch]

P2X-SERIES C-MOUNT W/O ILLUMINATOR STANDARD COVER - STRAIGHT 0° CONNECTORS

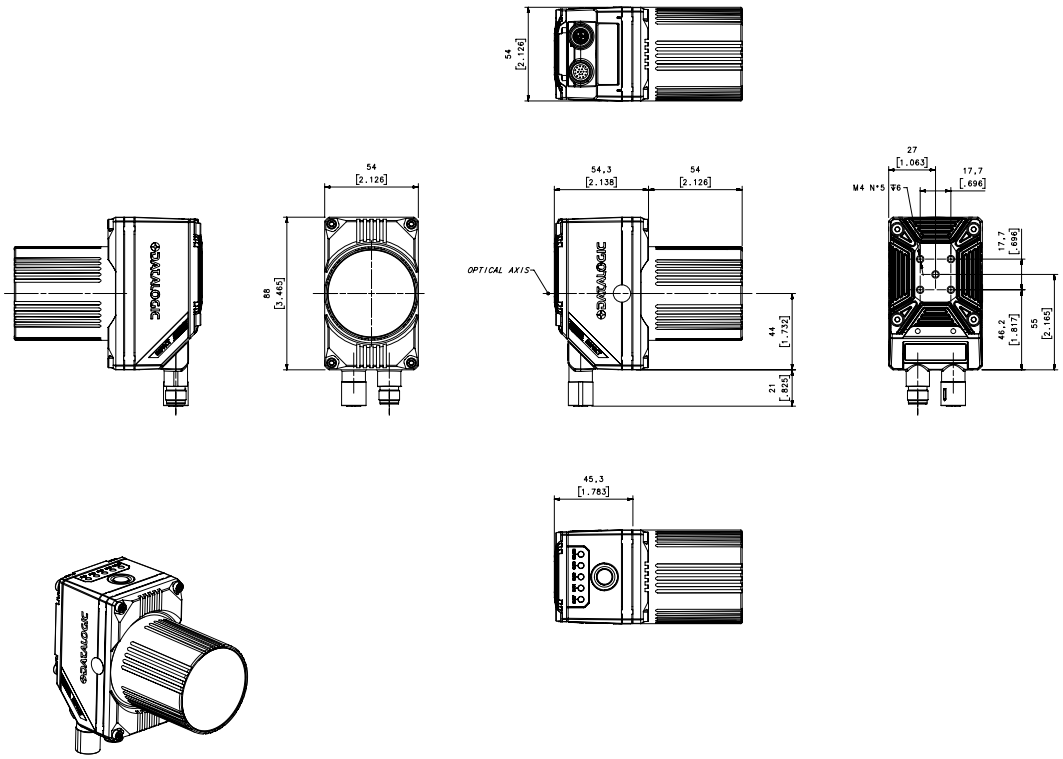

P2X-SERIES C-MOUNT W/O ILLUMINATOR STANDARD COVER - 90° CONNECTORS

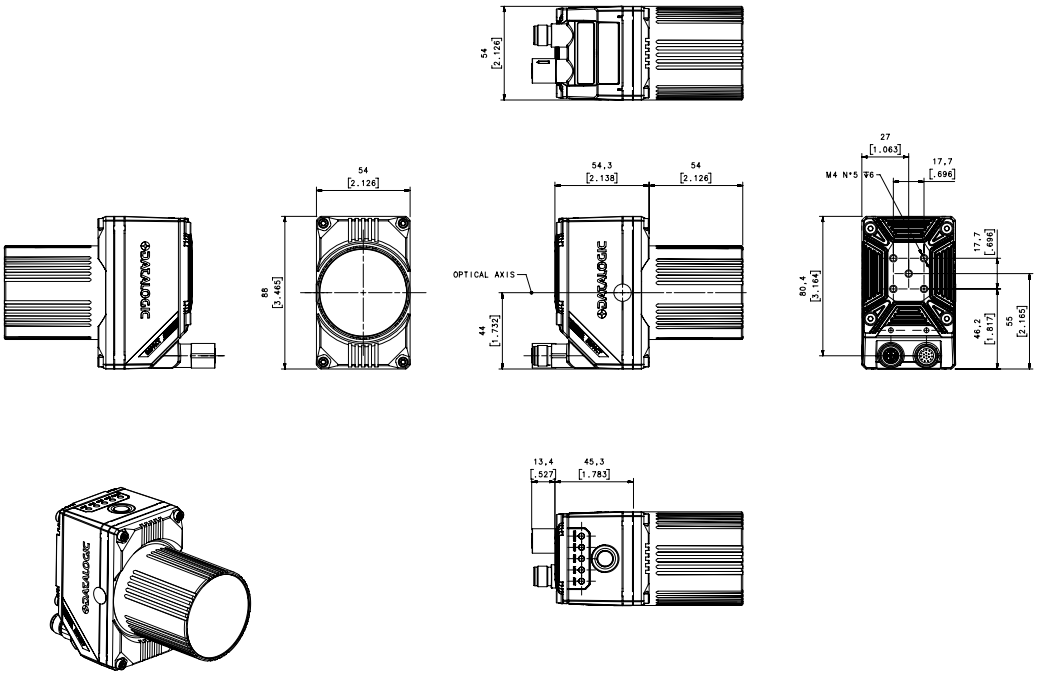

Dimensions in mm and [inch]

P2X-SERIES C-MOUNT W/O ILLUMINATOR LONG COVER - STRAIGHT 0° CONNECTORS

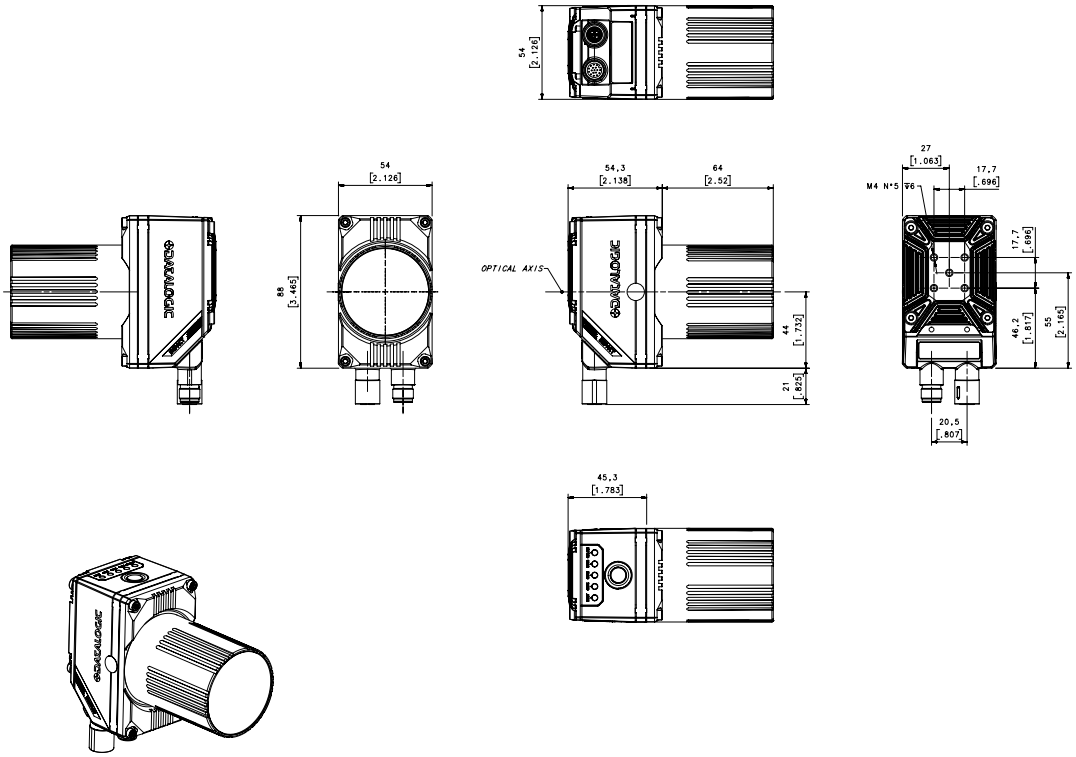

P2X-SERIES C-MOUNT W/O ILLUMINATOR LONG COVER - 90° CONNECTORS

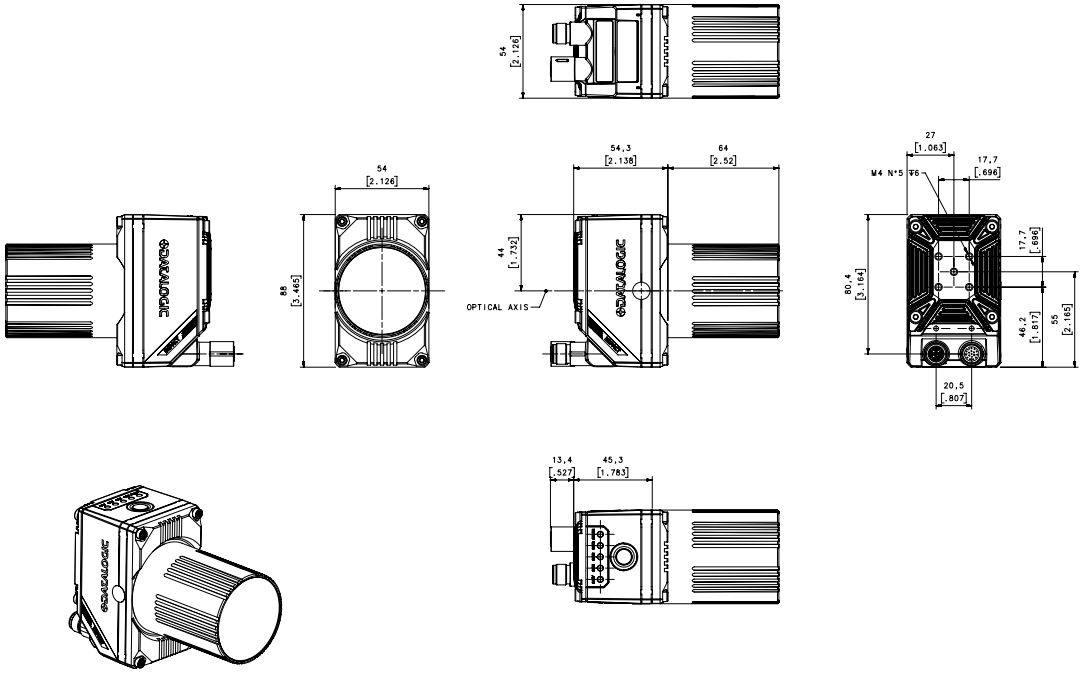

Dimensions in mm and [inch]

P2X-SERIES 36 LED ILLUMINATOR C-MOUNT - STRAIGHT 0° CONNECTORS

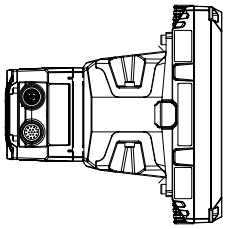

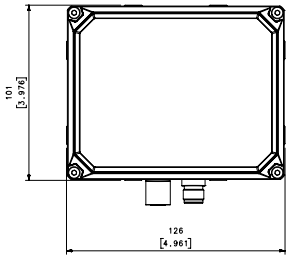

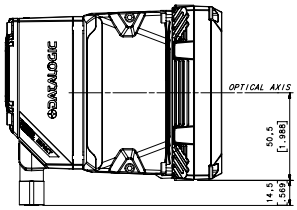

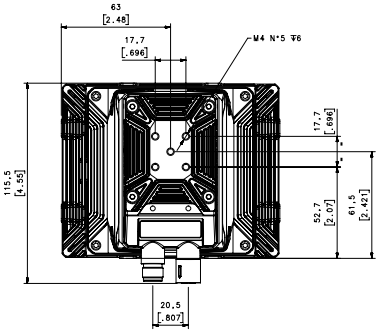

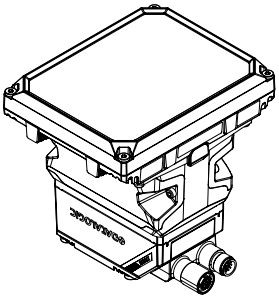

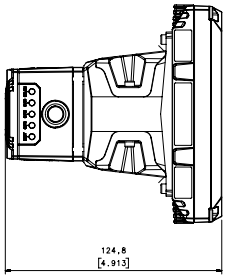

P2X-SERIES 36 LED ILLUMINATOR C-MOUNT - 90° CONNECTORS

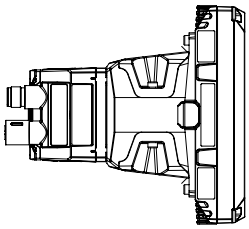

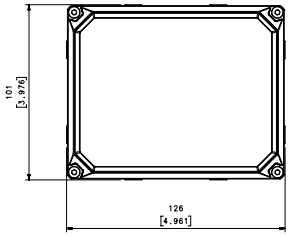

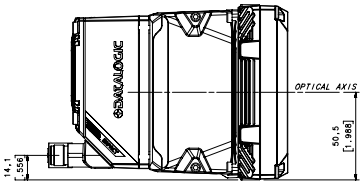

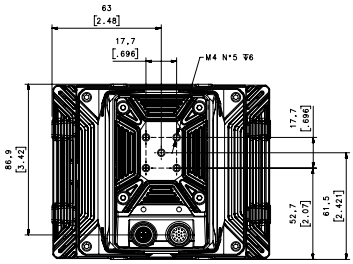

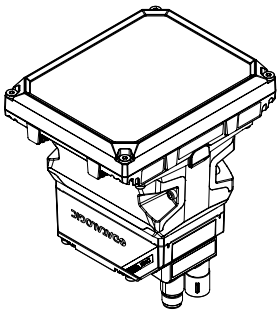

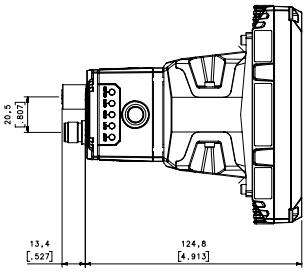

Dimensions in mm and [inch]

MODELS AND ACCESSORIES ORDER INFORMATION

CATEGORY	ORDER N°	DESCRIPTION
Micro-Video Lens Smart Cameras	937710021	P20M 100-000 ML
	937710022	P20C 000-000 ML
	937710023	P22M 700-000 ML
	937710024	P22C 600-000 ML
C-Mount Smart Cameras	937710005	P20M 100-000 CM
	937710006	P20C 000-000 CM
	937710007	P22M 700-000 CM
	937710008	P22C 600-000 CM
Micro-Video Lenses	95A900010	LNP 601-040 ML 6MM FF4 1/3"
	95A900011	LNP 603-040 ML 8MM FF4 1/3"
	95A900012	LNP 606-040 ML 12.5MM FF4 1/3"
	95A900013	LNP 608-040 ML 17.5MM FF4 1/3"
	95A900014	LNP Micro Lens Kit M320/P2
C-Mount lenses	93ACC0285	LNM 000-021 CM 4MM VF1.8 1/2" ED
	93ACC0286	LNM 001-031 CM 6MM VF1.85 1/2" ED
	93ACC0287	LNM 003-021 CM 8MM VF1.8 1/2.5" ED
	93ACC0288	LNM 005 021 CM 12MM VF1.8 1/1.8" ED
	93ACC0289	LNM 007-021 CM 16MM VF1.8 1/1.8" ED
	93ACC0290	LNM 009-021 CM 25MM VF1.85 1/1.8" ED
	93ACC0292	LNM 010-021 CM 35MM VF1.85 1/1.8" ED
	93ACC0343	LNM 011-012 CM 50MM VF1.65 2/3" AZ
Illuminators	95A900023	LTP 110-600 SN14L 60D RED 625nm
	95A900026	LTP 110-350 SN14L 35D RED 625nm
	95A900025	LTP 110-602 SN14L 60D BLU 475nm
	95A900028	LTP 110-352 SN14L 35D BLU 475nm
	95A900024	LTP 110-601 SN14L 60D WHT white
	95A900027	LTP 110-351 SN14L 35D WHT white
	95A900043	LTP 110-003 SN14L 90D IR 850nm NL
	95A900044	LTP 110-353 SN14L 35D IR 850nm
	95A900045*	LTP 112-000 SN36L 120D RED 625nm NL
	95A900031*	LTP 112-600 SN36L 60D RED 625nm
	95A900034*	LTP 112-350 SN36L 35D RED 625nm
	95A900047*	LTP 112-002 SN36L 120D BLU 475nm NL
	95A900033*	LTP 112-602 SN36L 60D BLU 475nm
	95A900036*	LTP 112-352 SN36L 35D BLU 475nm
	95A900046*	LTP 112-001 SN36L 120D WHT white NL
	95A900032*	LTP 112-601 SN36L 60D WHT white
	95A900035*	LTP 112-351 SN36L 35D WHT white
	95A900048*	LTP 112-003 SN36L 90D IR 850nm NL
	95A900049*	LTP 112-353 SN36L 35D IR 850nm
	95A900038	Adapter LL ML LT 36L M320/P2
	95A900029	Adapter CM LT 36L P2

CATEGORY	ORDER N°	DESCRIPTION
Covers	93ACC0271**	Cover STD LT 14L M320/P2
	93ACC0273	Cover Polarizer LT 14L M320/P2
	93ACC0272	Cover STD LT 36L M320/P2
	93ACC0274	Cover Polarizer LT 36L M320/P2
	93ACC0278	Cover ESD LT 14L M320/P2
	93ACC0323	Cover LT 14L STS320/ATS320/P2
	93ACC0324	Cover LT 36L STS320/ATS320/P2
	937710025	C-Mount lens standard cover P2x
	937710026	C-Mount lens long cover P2x
Filters	95A900018	Filter YAG Cut LT 14L M320/P2
	95A900016	Filter BLU Bandpass 475nm LT 14L M320/P2
	95A900015	Filter RED Bandpass 625nm LT 14L M320/P2
	95A900017	Filter IR Bandpass 850nm LT 14L M320/P2
	95A900039	Filter UV Cut Longpass 415 LT 14L M320/P2
	95A900064	Filter IR Cut LT 14L M320/P2
	95A900022	Filter YAG Cut LT 36L M320/P2
	95A900020	Filter BLU Bandpass 475nm LT 36L M320/P2
	95A900019	Filter RED Bandpass 625nm LT 36L M320/P2
	95A900021	Filter IR Bandpass 850nm LT 36L M320/P2
	95A900040	Filter UV Cut Longpass415 LT 36L M320/P2
	95A900065	Filter IR Cut LT 36L M320/P2
Add-on Licenses	95A900008	LICENSE, ENHANCED, SMART CAMERA
	95A900009	LICENSE, PRO, SMART CAMERA
Brackets	93ACC0283	BK-32-010 SIDE FIX BRACKET M320/P2 BODY
	93ACC0282**	BK-32-000 STD FIX BRACKET M320/P2 BODY
Cables	93A050058	CAB-DS01-S M12-IP67 TO CBX 1M
	93A050059	CAB-DS03-S M12-IP67 TO CBX 3M
	93A050060	CAB-DS05-S M12-IP67 TO CBX 5M
	93A051390	CAB-DS10-S M12-IP67 TO CBX 10M
	95A900061	CV-A1-30-F-05 M12 17p, Drag chain, 5m
	95A900062	CV-A1-30-F-10 M12 17p, Drag chain, 10m
	95A900063	CV-A1-30-F-15 M12 17p, Drag chain, 15m
	93A050122	CAB-ETH-X-M01 M12-IP67 GETH-X CAB 1M
	93A050123	CAB-ETH-X-M03 M12-IP67 GETH-X CAB 3M
	93A050124	CAB-ETH-X-M05 M12-IP67 GETH-X CAB 5M
	93A050140	CAB ETH-X-M10 M12-IP67 GETH-X CAB 10M
	95A900058	CV-N1-48-F-05 GigETH-X, Drag chain, 5m
	95A900059	CV-N1-48-F-10 GigETH-X, Drag chain, 10m
	95A900060	CV-N1-48-F-15 GigETH-X, Drag chain, 15m
	93A050128	CAB-ETH-X-RJ ADAPTER CAB GETH-X to RJ45
	93A050129	CAB-ETH-X-D ADAPTER CAB GETH-X to ETH-D

**Requires Adapter LL ML LT 36L M320/P2 (order no. 95A900038) when using Micro-Video lenses or Adapter CM LT 36L P2 (order no. 95A900029) when using C-Mount lenses*
***Already included in the smart camera package.*

P2xx x00-000 xx

Resolution
0 = qHD
(960 x 540 pixels)
2 = 2MP
(1920 x 1080 pixels)

Mono VS Color
M = monochrome
C = color

Imager Type
0 = qHD (960 x 540 pixels) color
1 = qHD (960 x 540 pixels) mono
6 = 2MP (1920 x 1080 pixels) color
7 = 2MP (1920 x 1080 pixels) mono

Lens mount type
ML = Micro Video lens
CM = C-Mount lens

LTP 11x-xxx

Illuminator size
0 = 14 LED
2 = 36 LED

LED lens aperture
35 = 35 degrees
60 = 60 degrees
00 = 90/120 degrees

Color
0 = red
1 = white
2 = blue
3 = infrared

The company endeavours to continuously improve and renew its products; for this reason the technical data and contents of this catalogue may undergo variations without prior notice. For correct installation and use, the company can guarantee only the data indicated in the instruction manual supplied with the products.