Through beam sensors (Emitter), rectangular, plastic
FSDK 07D9601/KS35A

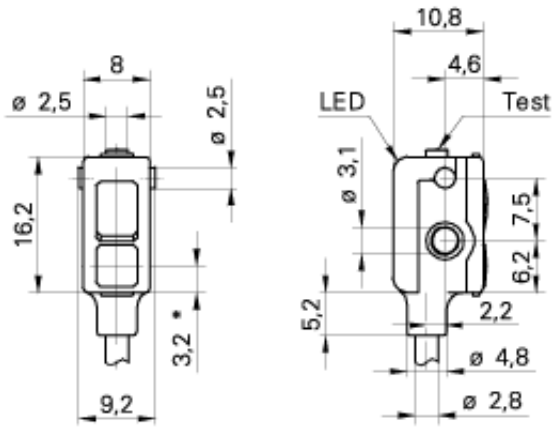

* emitter axis

Technical Data	
polarization filter	-
function	through beam sensor
emitter / receiver	emitter
output	-
output state	-
housing style	rectangular
width /diameter	8 mm
height	16,2 mm
depth	10,8 mm
housing material	plastic (PMMA, MABS, PA)
connection	flylead connector
nominal range Sn	0 - 2,5 m
actual range Sb	0 - 2 m
beam focal point	-
repeatability	-
output indicator	-
alignment aid / soiled lens indicator	-
wave length	660 nm
light source	pulsed red diode
laser class (norm)	-
voltage supply range +Vs	10 - 30 VDC
supply current average/peak value	12 / 20 mA
switching current	-
voltage drop	-
response time / release time	-
automatic adjustment time	-
min. pulse length teach signal	-
sensitivity adjustable	-
short circuit protection	-
reverse polarity protection	yes
temperature range	-20 ... +50 °C
protection class	IP 65
connectors	ESW 31A,ESG 32A

photo
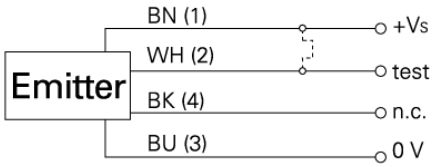
connection diagram