# Retro-reflective sensors (Polarization filter), rectangular, metal
# FPDM 16N5105

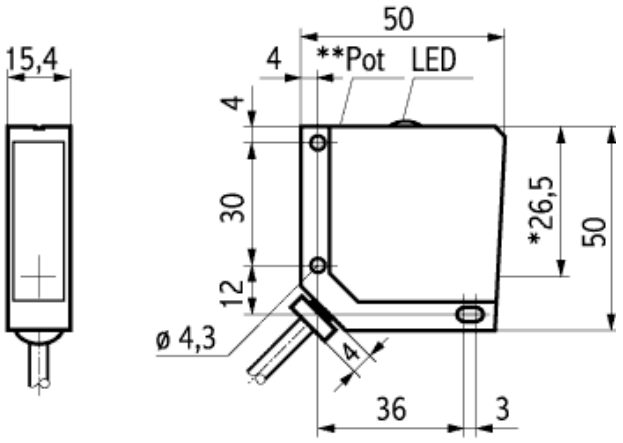


* emitter axis
** Pot only on versions FPDM 16x5105 und FPDM 16x5105/S19

| Technical Data | |
|---|---|
| polarization filter | yes |
| function | retro-reflective sensor (rrs) |
| emitter / receiver | - |
| output | NPN |
| output state | light/dark operate |
| housing style | rectangular |
| width /diameter | 15,4 mm |
| height | 50 mm |
| depth | 50 mm |
| housing material | die-cast zinc |
| connection | cable |
| nominal range Sn | 0 - 9 m |
| actual range Sb | 0 - 7,3 m |
| beam focal point | - |
| repeatability | - |
| output indicator | LED yellow |
| alignment aid / soiled lens indicator | flashing LED |
| wave length | 660 nm |
| light source | pulsed red diode |
| laser class (norm) | - |
| voltage supply range +Vs | 10 - 30 VDC |
| supply current average/peak value | 26 / 36 mA |
| switching current | < 200 mA |
| voltage drop | < 1,8 VDC |
| response time / release time | < 1 ms |
| automatic adjustment time | - |
| min. pulse length teach signal | - |
| sensitivity adjustable | potentiometer |
| short circuit protection | yes |
| reverse polarity protection | yes |
| temperature range | -25 ... +65 °C |
| protection class | IP 67 |
| connectors | none |

**photo**
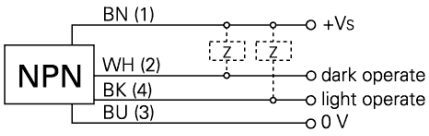
**connection diagram**