Angle fork sensor, L profile

FGLM 050P8001/S35L

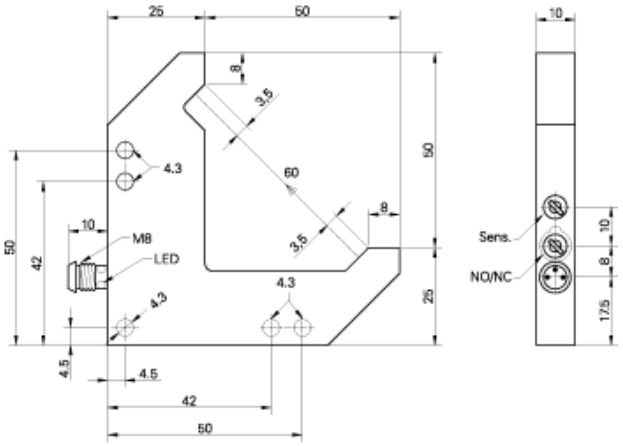

AUDIN
Composants & systèmes d'automatisme
7 bis rue de Tinqueux - 51100 Reims - France
Tel. +33(0)326042021 • Fax +33(0)326042820
http://www.audin.fr • e-mail info@audin.fr

Technical Data	
function	through beam sensor
Fork opening	50 mm
scan depth	50 mm
repeatability	0,06 mm
smallest recognizable object	0,5 mm
switching hysteresis	< 0,25 mm
response time / release time	< 0,125 ms
output	PNP
output state	light/dark operate switchable
switching current	< 200 mA
short circuit protection	yes
voltage drop	< 2,8 VDC
output indicator	LED yellow
voltage supply range +Vs	10 - 35 VDC
reverse polarity protection	yes
supply current average/peak value	30 / 30 mA
light source	pulsed red diode
wave length	660 nm
laser class (norm)	-
sensitivity adjustable	yes
Ambient light immunity	80 kLux
housing material	die-cast zinc
housing style	L profile
width /diameter	75 mm
height	75 mm
depth	10 mm
temperature range	-10 ... +60 °C
protection class	IP 67
connection	connector
connectors	ES 8.2P, ES 9.2P, ESW 31S, ESG32S

connection diagram

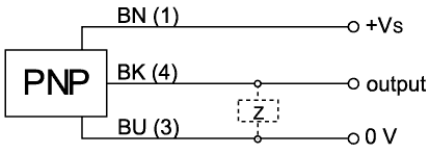

Angle fork sensor, L profile
FGLM 080P8001/S35L

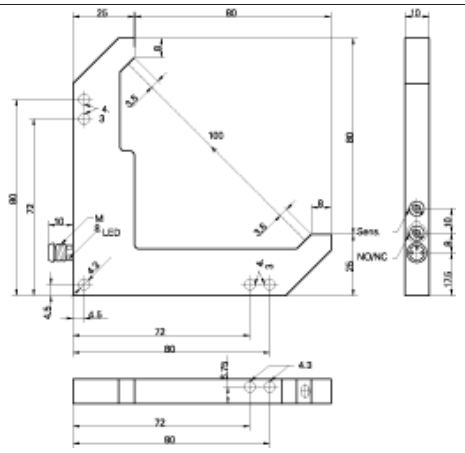

Technical Data	
function	through beam sensor
Fork opening	80 mm
scan depth	80 mm
repeatability	0,06 mm
smallest recognizable object	0,7 mm
switching hysteresis	< 0,25 mm
response time / release time	< 0,125 ms
output	PNP
output state	light/dark operate switchable
switching current	< 200 mA
short circuit protection	yes
voltage drop	< 2,8 VDC
output indicator	LED yellow
voltage supply range +Vs	10 - 35 VDC
reverse polarity protection	yes
supply current average/peak value	30 / 30 mA
light source	pulsed red diode
wave length	660 nm
laser class (norm)	-
sensitivity adjustable	yes
Ambient light immunity	70 kLux
housing material	die-cast zinc
housing style	L profile
width /diameter	105 mm
height	105 mm
depth	10 mm
temperature range	-10 ... +60 °C
protection class	IP 67
connection	connector
connectors	ES 8.2P, ES 9.2P, ESW 31S, ESG32S

connection diagram

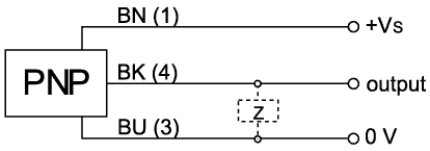

Angle fork sensor, L profile
FGLM 120P8001/S35L

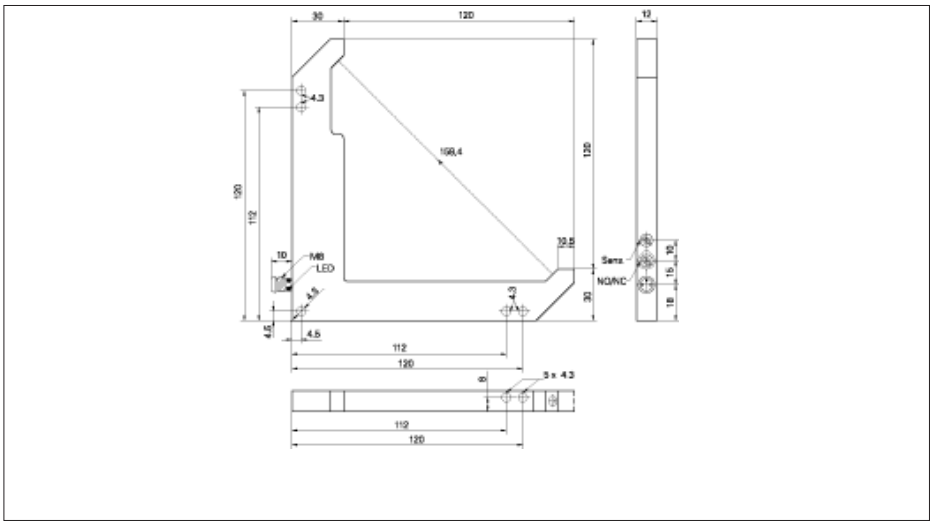

Technical Data	
function	through beam sensor
Fork opening	120 mm
scan depth	120 mm
repeatability	0,06 mm
smallest recognizable object	1 mm
switching hysteresis	< 0,25 mm
response time / release time	< 0,25 ms
output	PNP
output state	light/dark operate switchable
switching current	< 200 mA
short circuit protection	yes
voltage drop	< 2,8 VDC
output indicator	LED yellow
voltage supply range +Vs	10 - 35 VDC
reverse polarity protection	yes
supply current average/peak value	40 / 40 mA
light source	pulsed red diode
wave length	660 nm
laser class (norm)	-
sensitivity adjustable	yes
Ambient light immunity	50 kLux
housing material	die-cast zinc
housing style	L profile
width /diameter	150 mm
height	150 mm
depth	12 mm
temperature range	-10 ... +60 °C
protection class	IP 67
connection	connector
connectors	ES 8.2P, ES 9.2P, ESW 31S, ESG32S
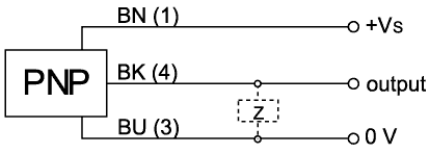
connection diagram