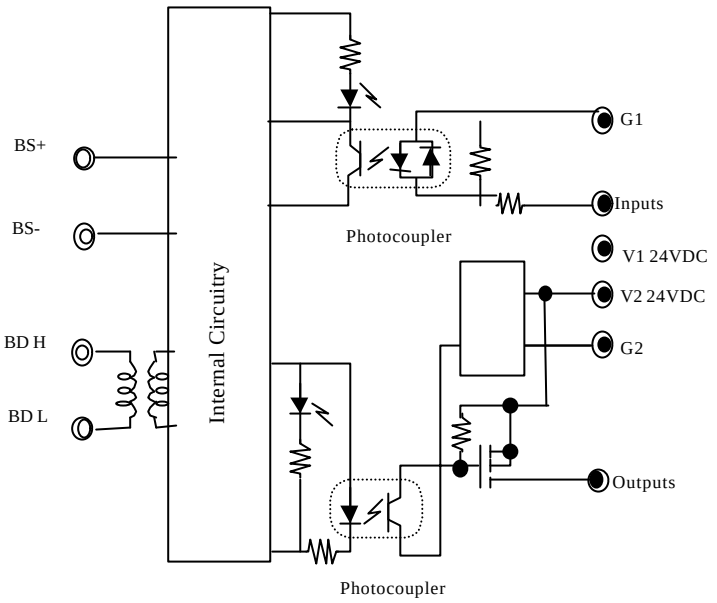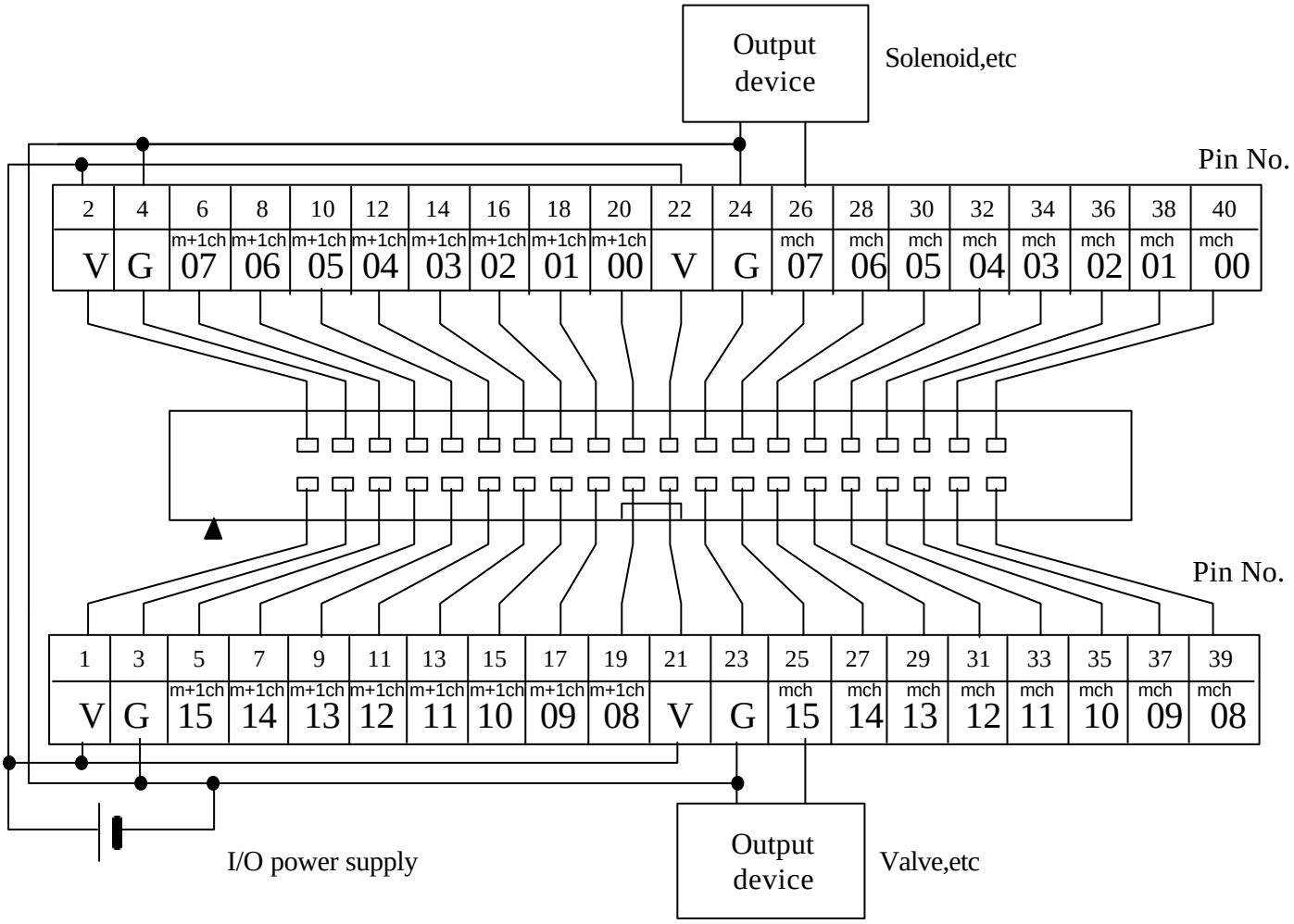SRT2-OD32ML-1