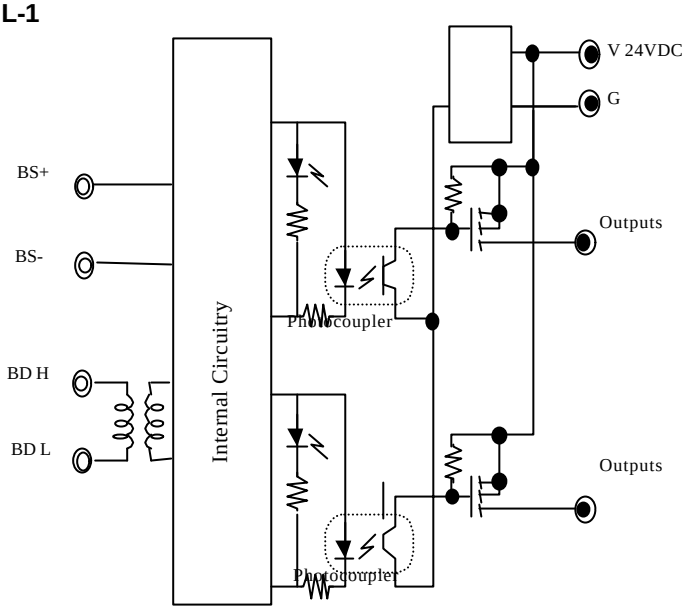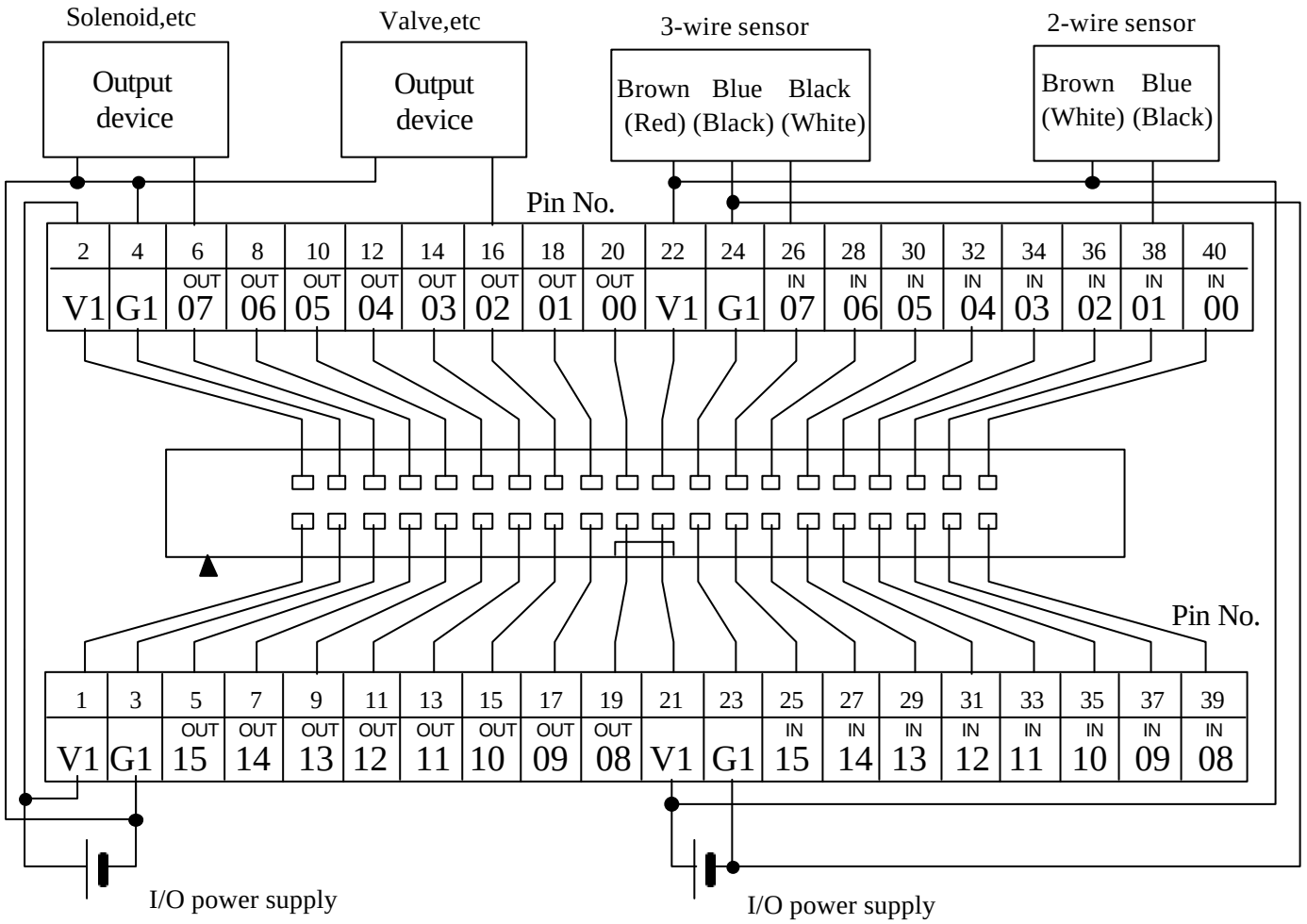**SRT2-MD32ML-1**