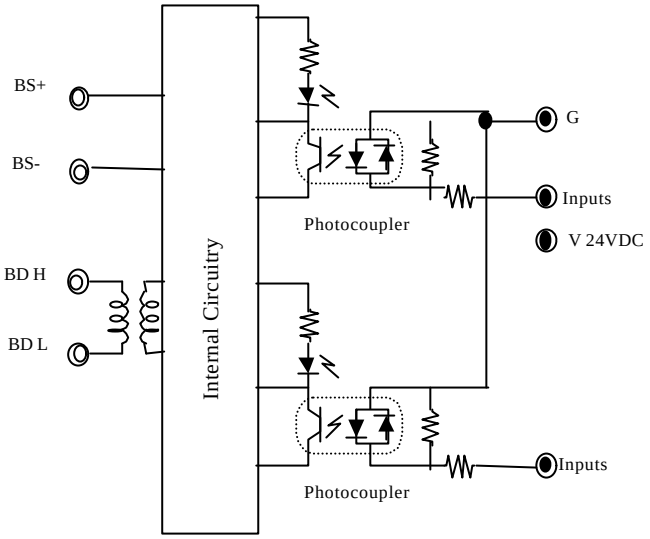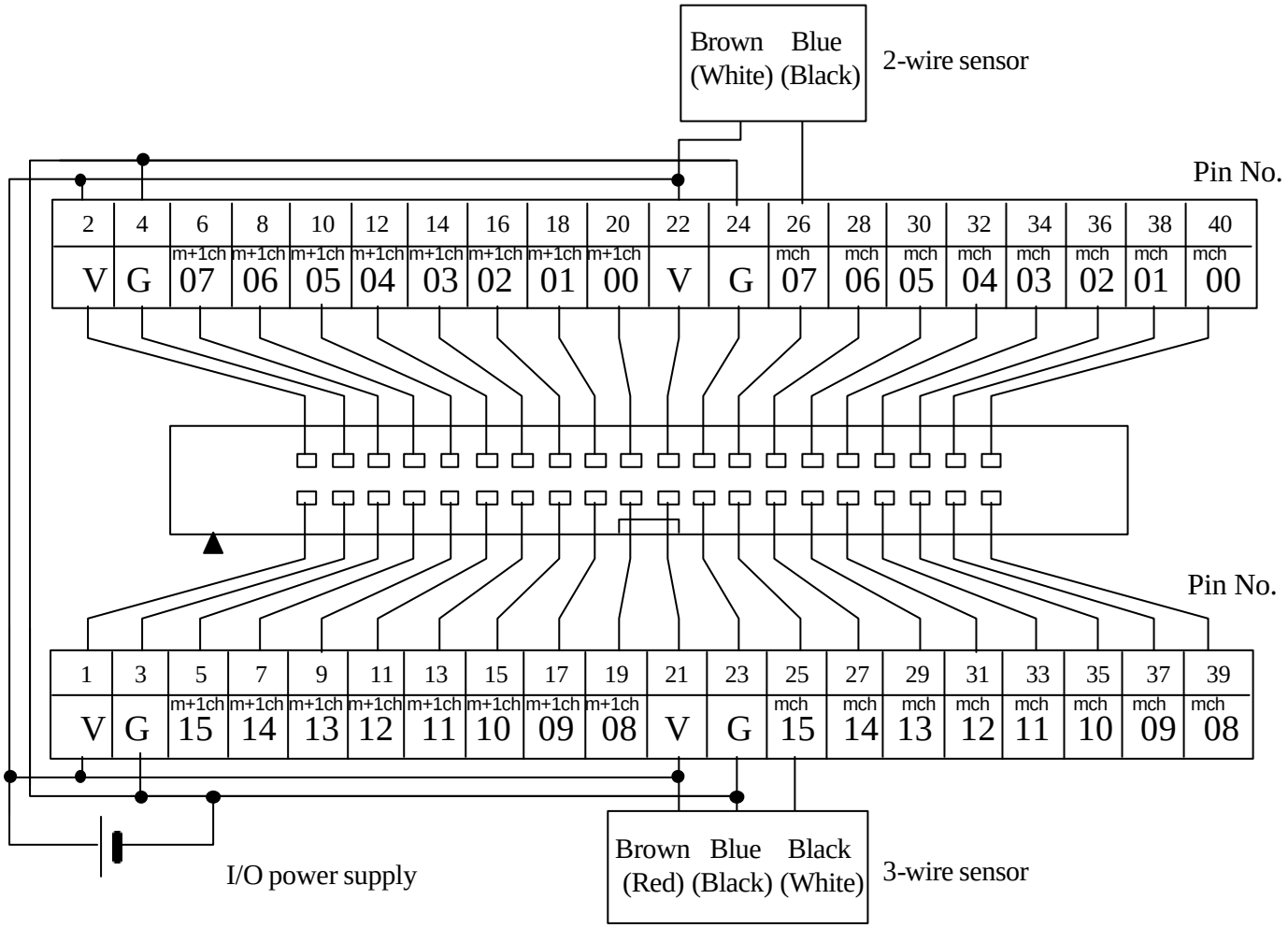SRT2-ID32ML-1