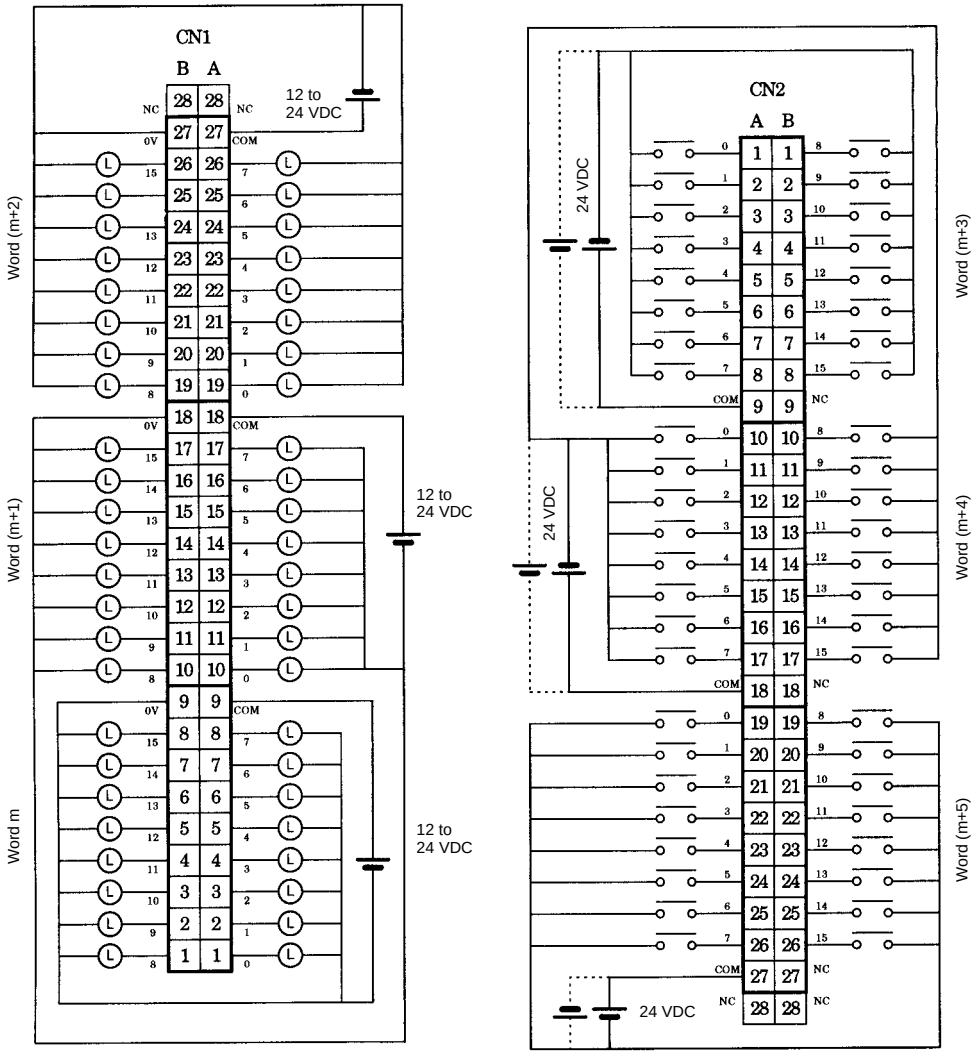Terminal Connections: CS1W-MD292 24-VDC 48-point Input/48-point Transistor Output Unit (Sourcing Outputs)