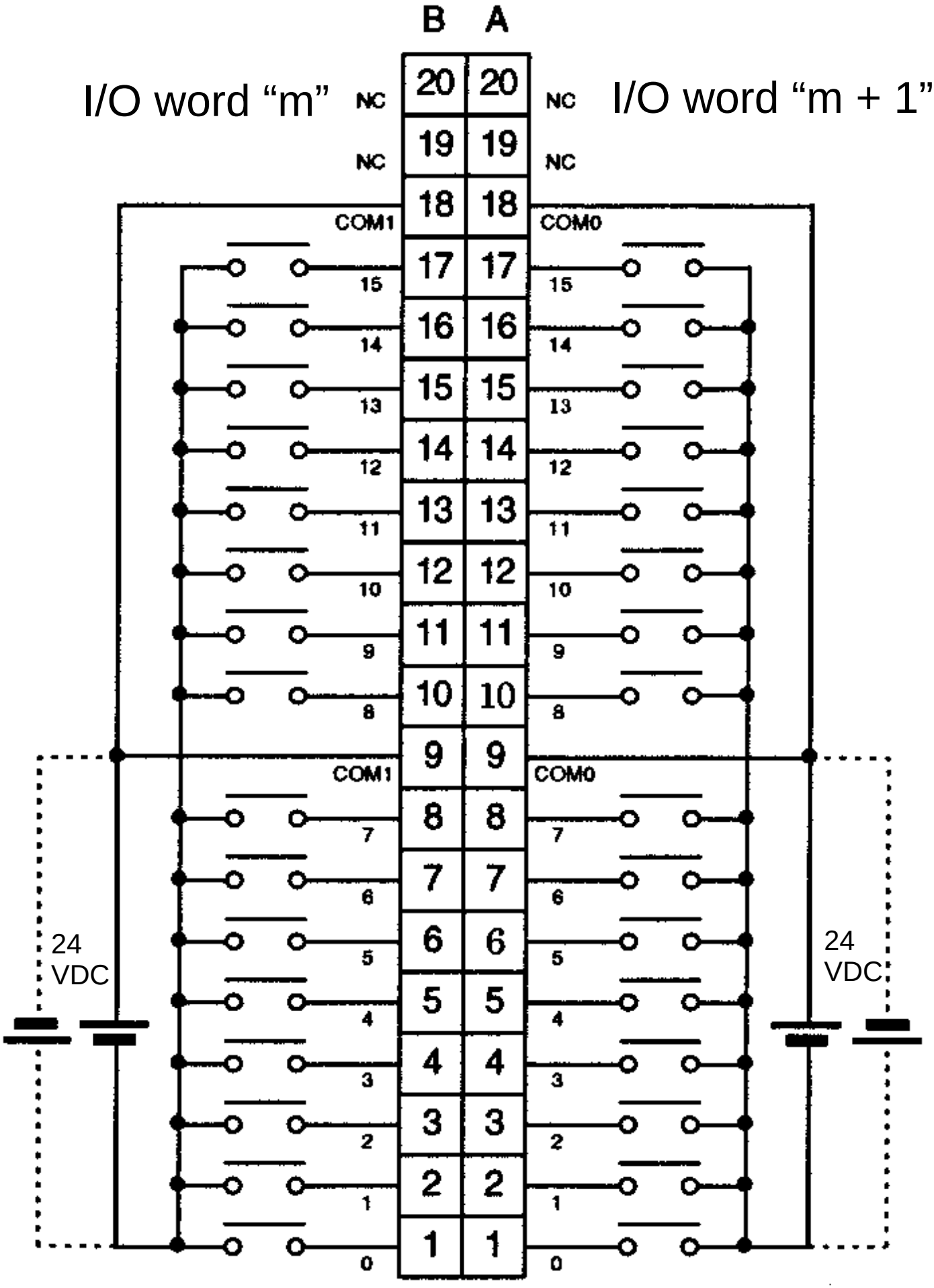
B
A
I/O word “m”
I/O word “m + 1”
NC
NC
COM1
COM1
COM0
COM0
24
VDC
24
VDC