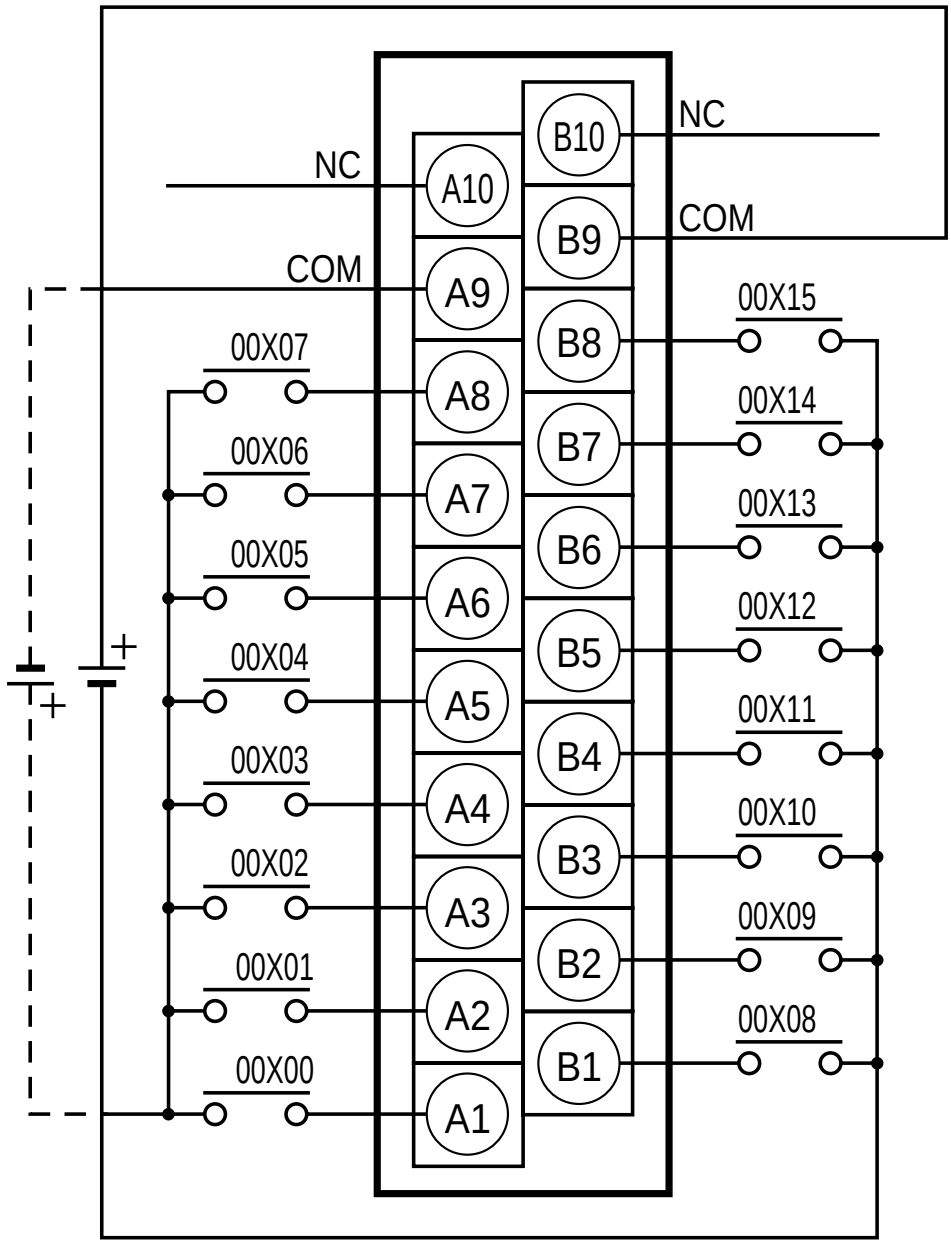PLC I/O Unit	**Wired to CPM2C inputs**
Connector Terminal Conversion Unit	**XW2D-20G6**
Connecting Cable	**XW2Z-□□□A**
Connections Diagrams