CPU Units with 10 I/O Points: CPM2C-10C□DR-D
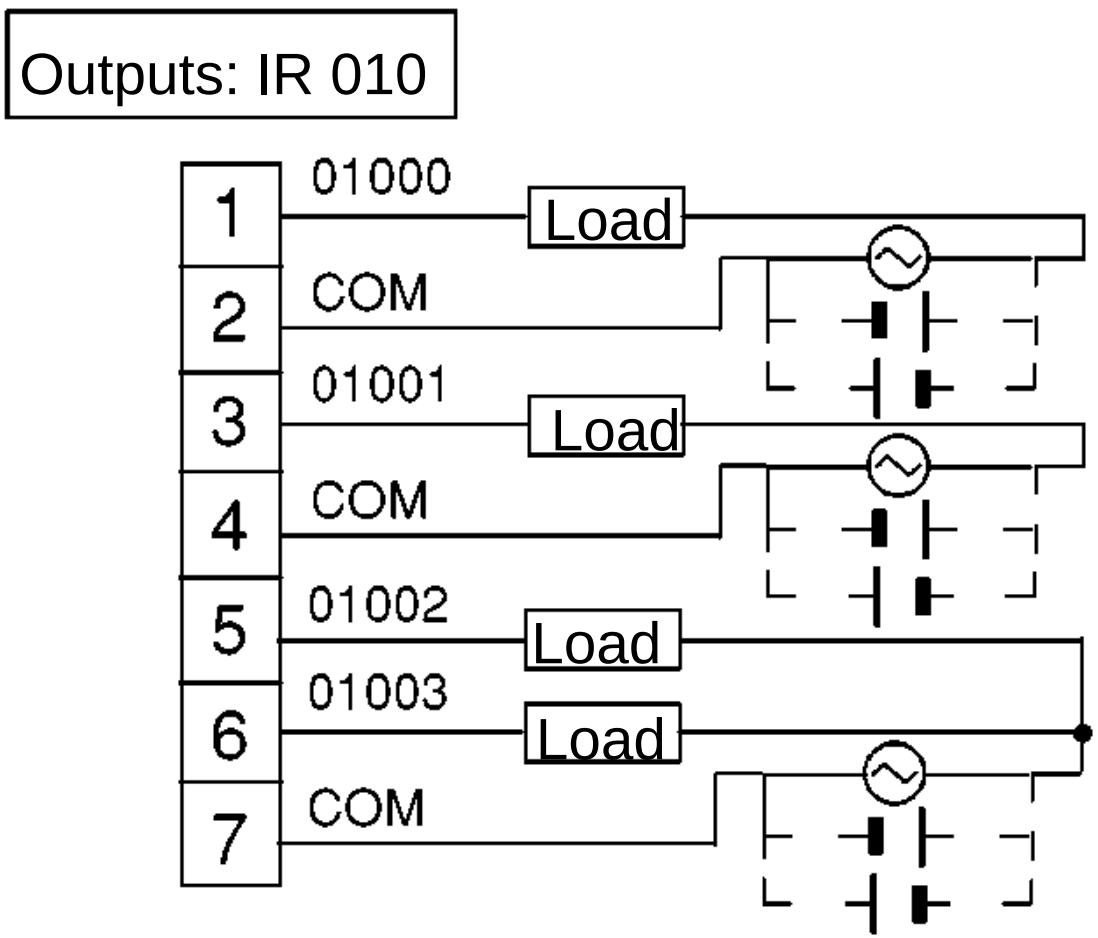
Output capacity	Max. common capacity
2 A (250 VAC or 24 VDC)	4 A/common