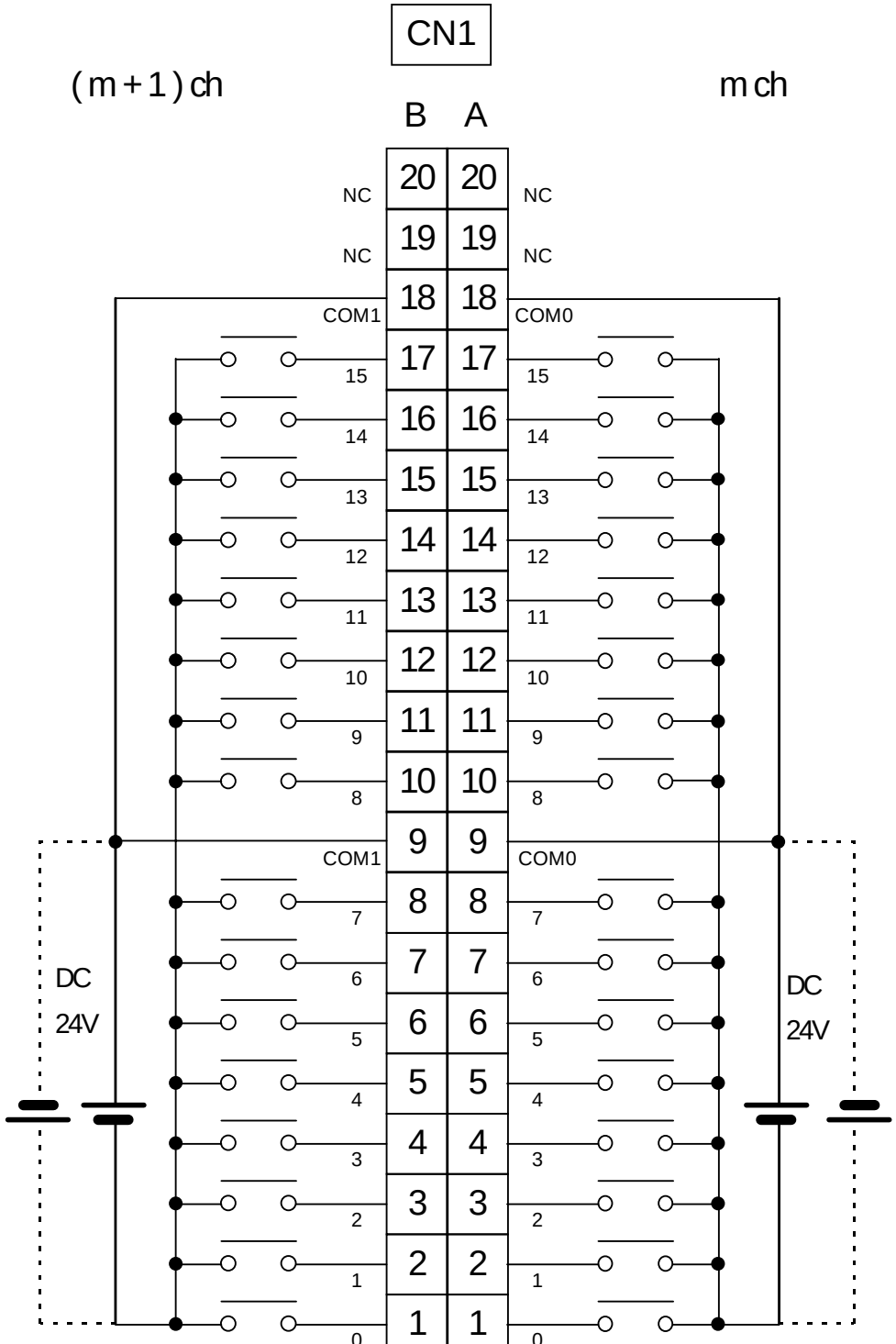
CN1
(m+1)ch
m ch
B A
NC
NC
COM1
COM0
15
14
13
12
11
10
9
8
COM1
COM0
7
6
5
4
3
2
1
0
DC
24V
DC
24V

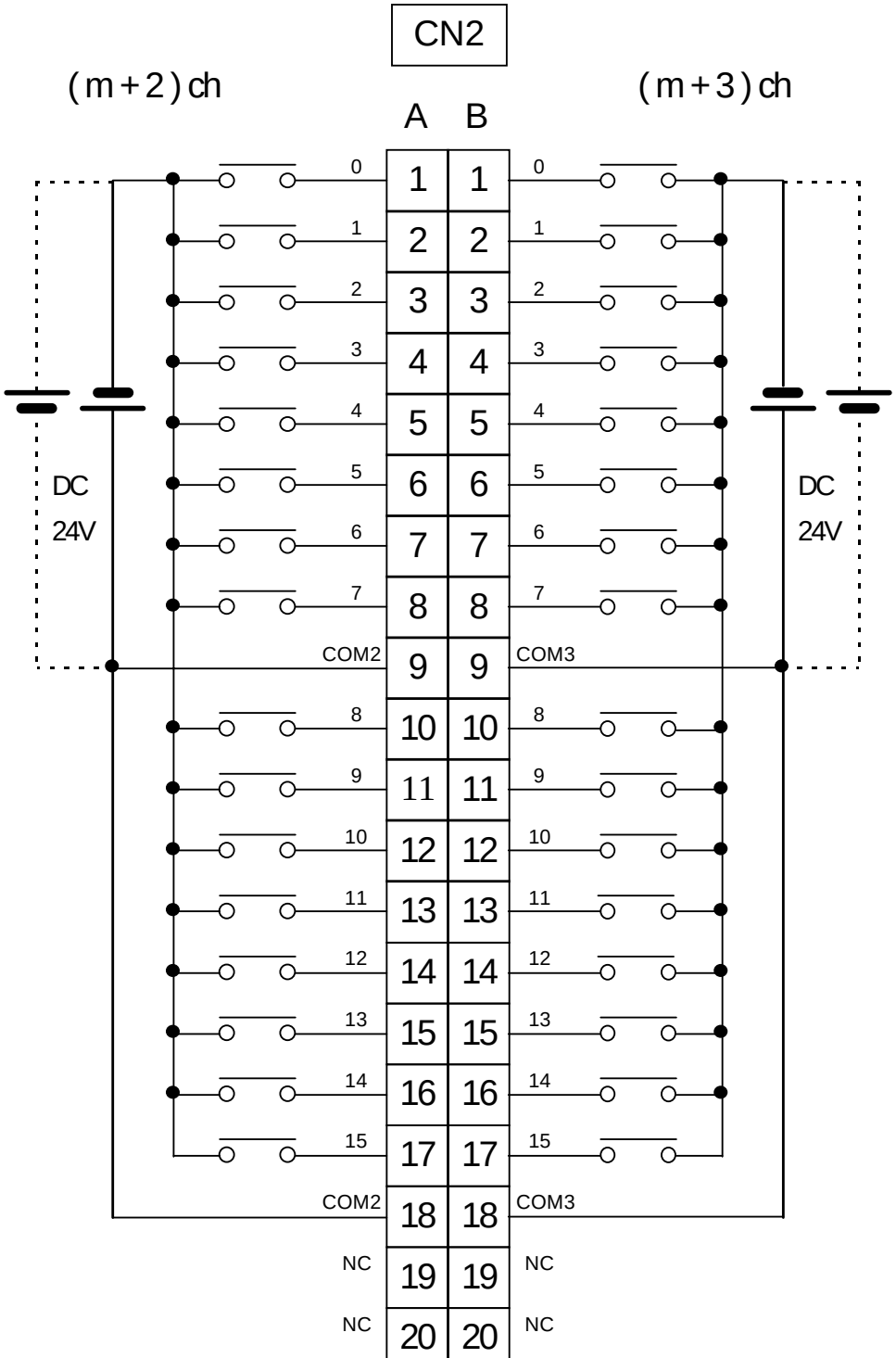
CN2
(m+2)ch
(m+3)ch
A B
0
1
2
3
4
5
6
7
COM2
COM3
8
9
10
11
12
13
14
15
COM2
COM3
NC
NC
DC
24V
DC
24V