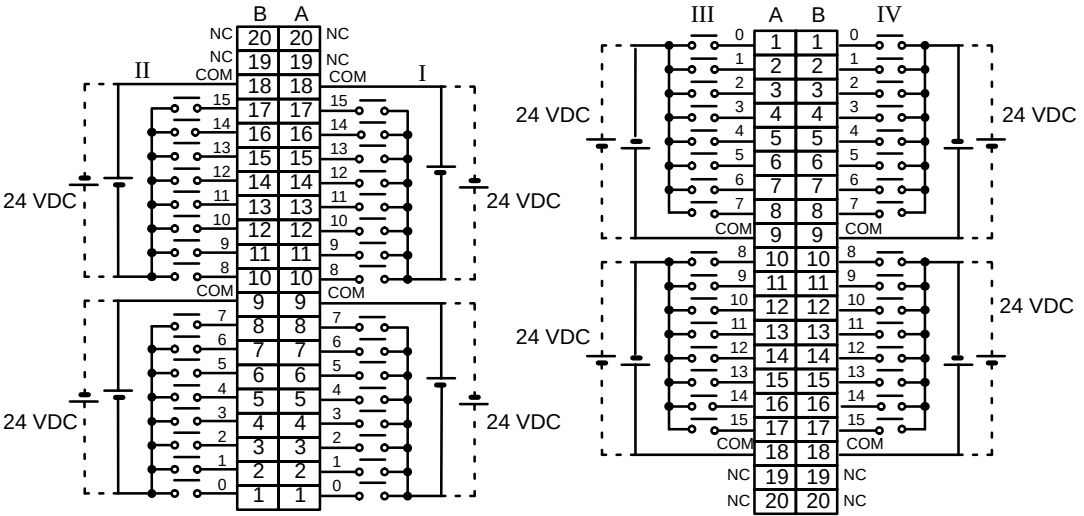
B A
NC 20 20 NC
NC 19 19 NC
COM 18 18 COM
17 17
16 16
15 15
14 14
13 13
12 12
11 11
10 10
9 9
8 8
7 7
6 6
5 5
4 4
3 3
2 2
1 1
II
I
III
IV
24 VDC
COM
NC