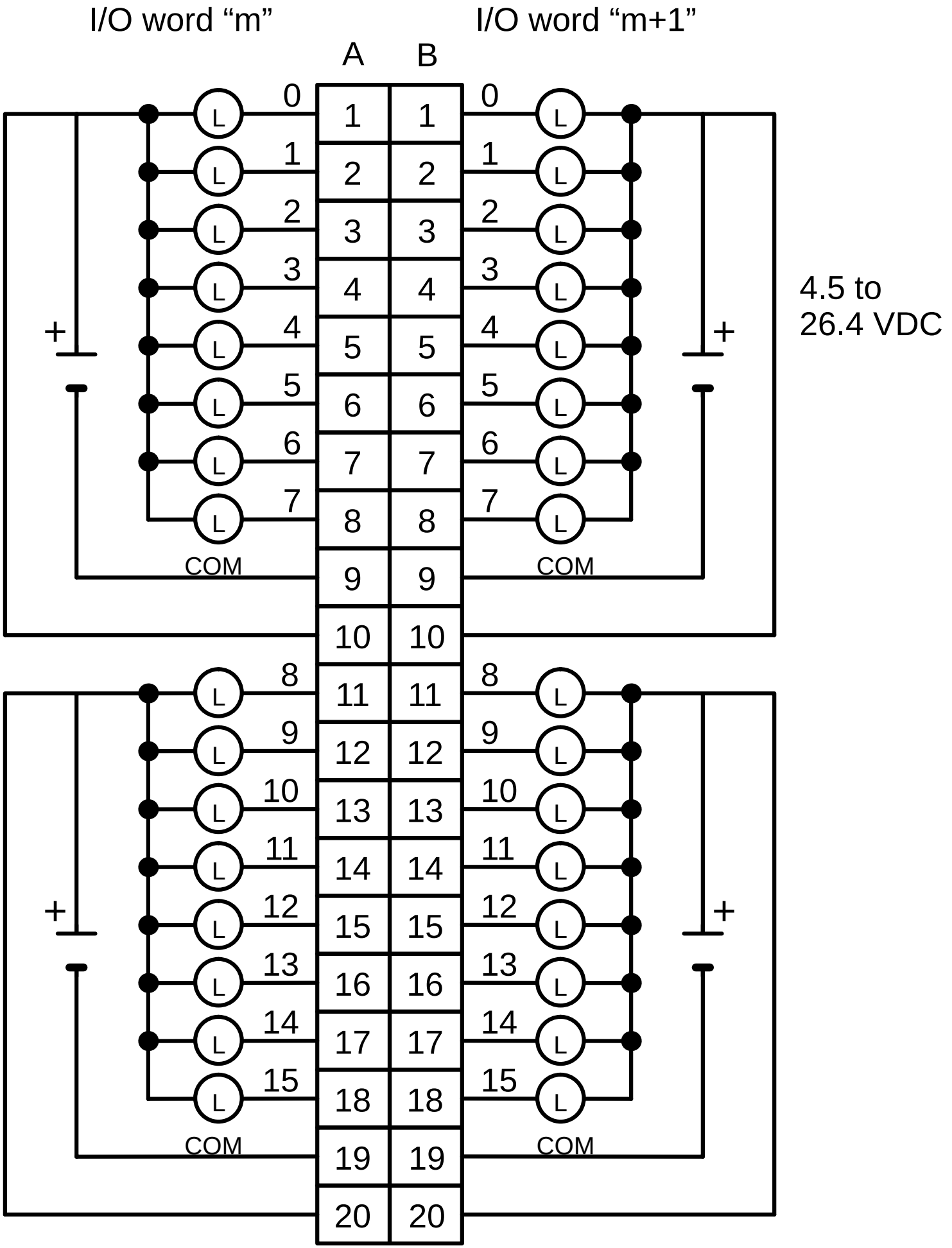
I/O word “m”
I/O word “m+1”
A
B
0
1
2
3
4
5
6
7
8
9
10
11
12
13
14
15
L
COM
+
4.5 to
26.4 VDC