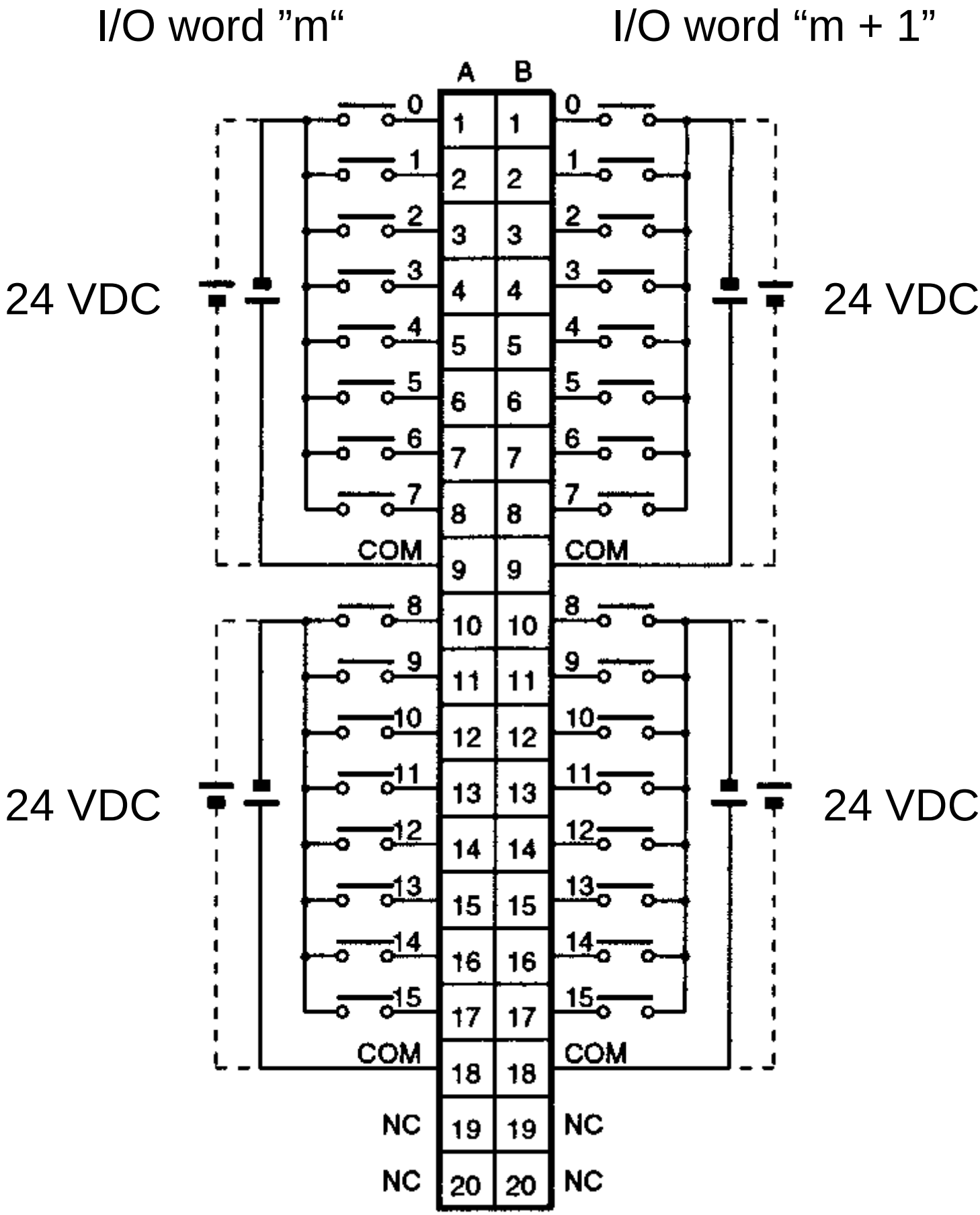
I/O word ”m“
I/O word “m + 1”
A
B
24 VDC
24 VDC
24 VDC
24 VDC
COM
COM
COM
COM
NC
NC
NC
NC