Signal Connections Configuration 415

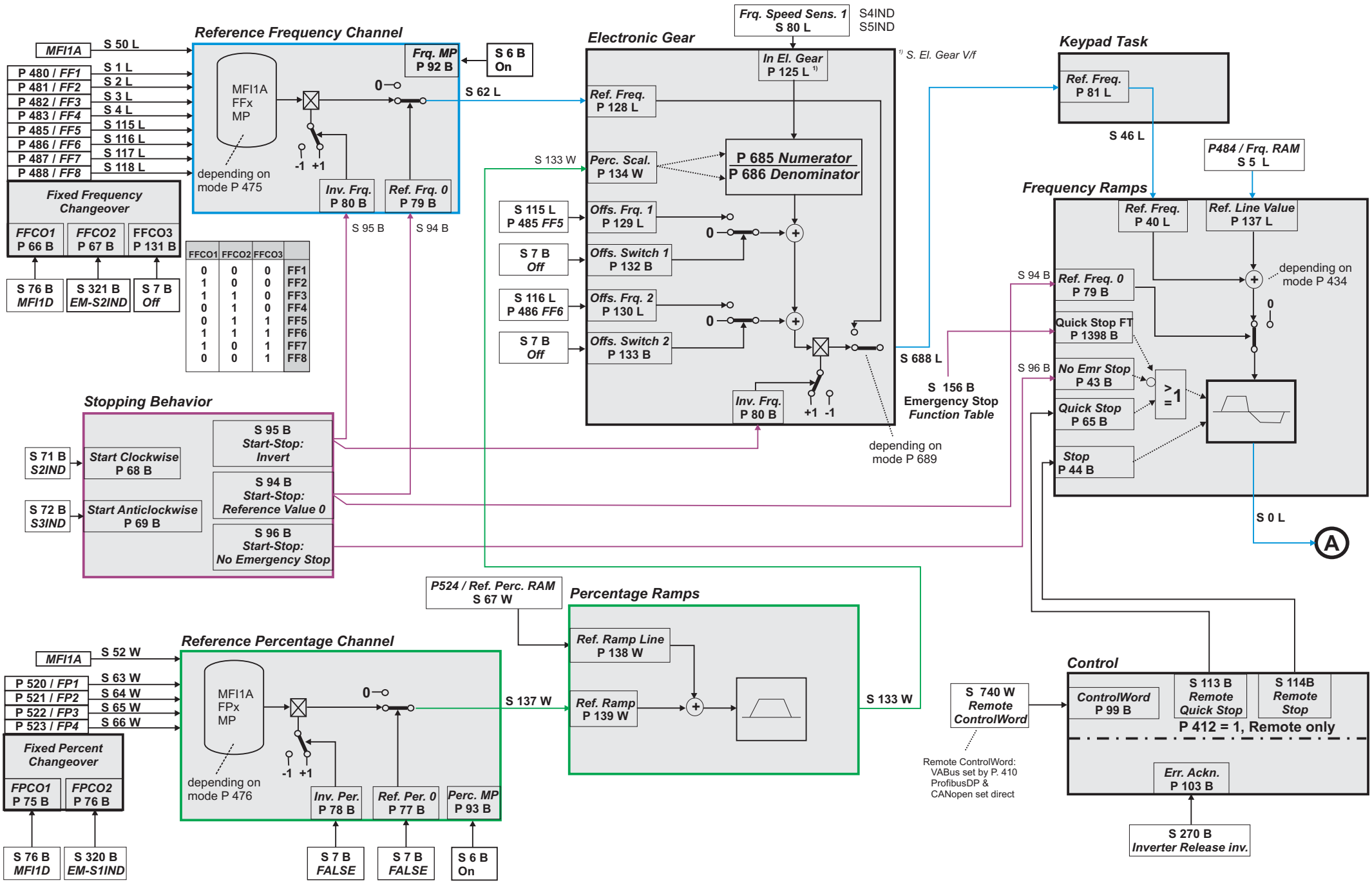
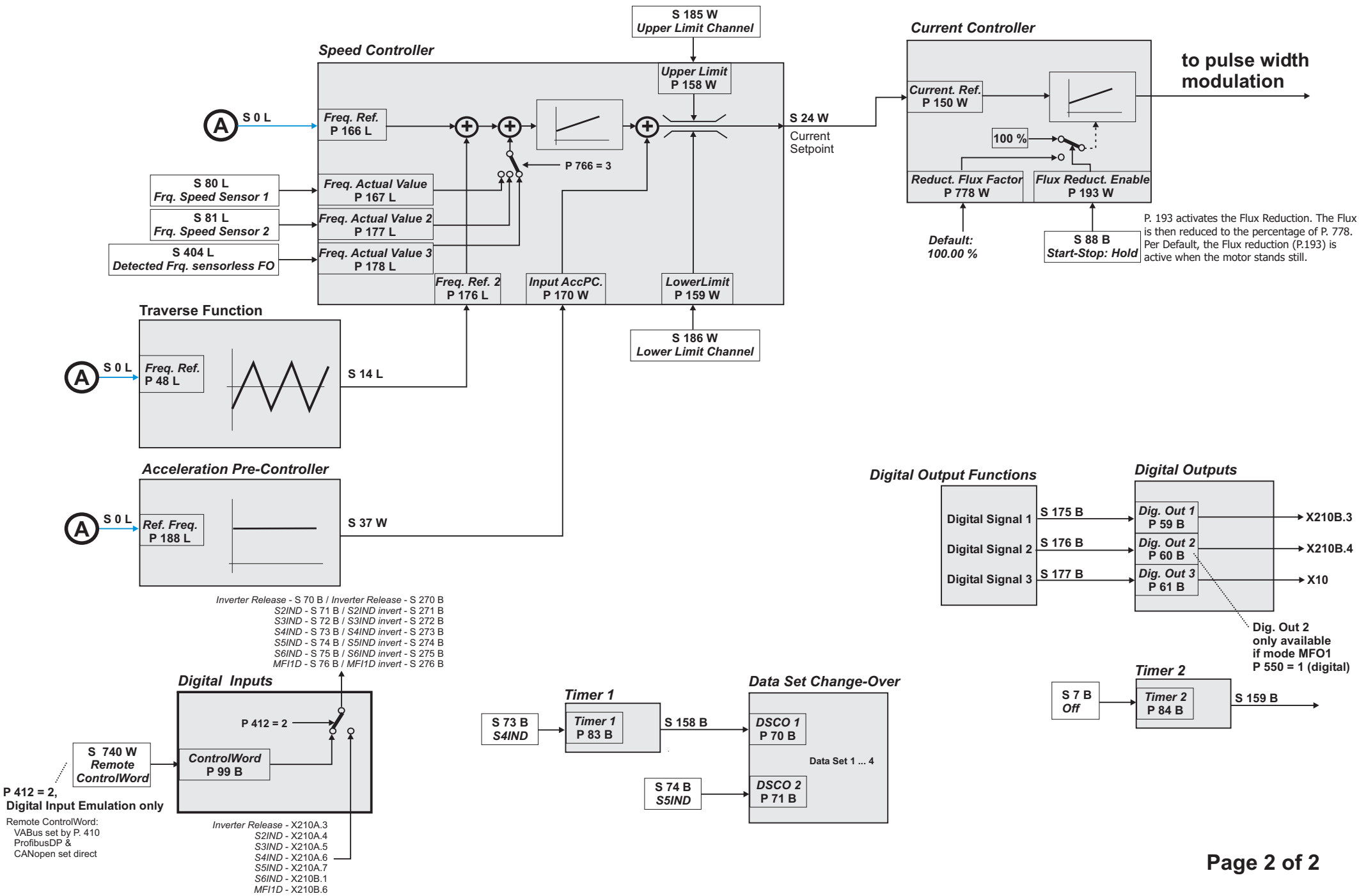
Signal Connections Configuration 415