Signal Connections Configuration 215

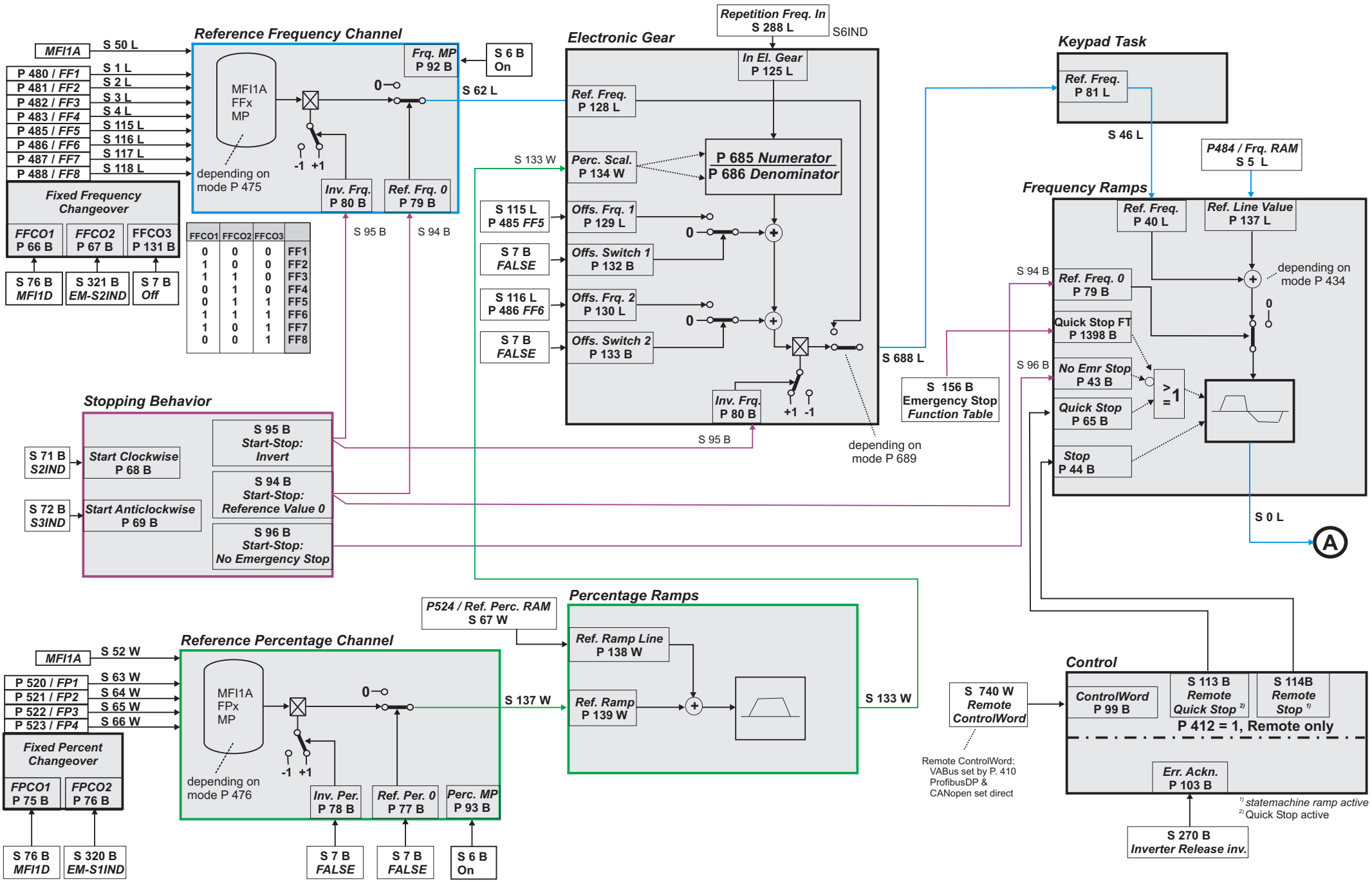
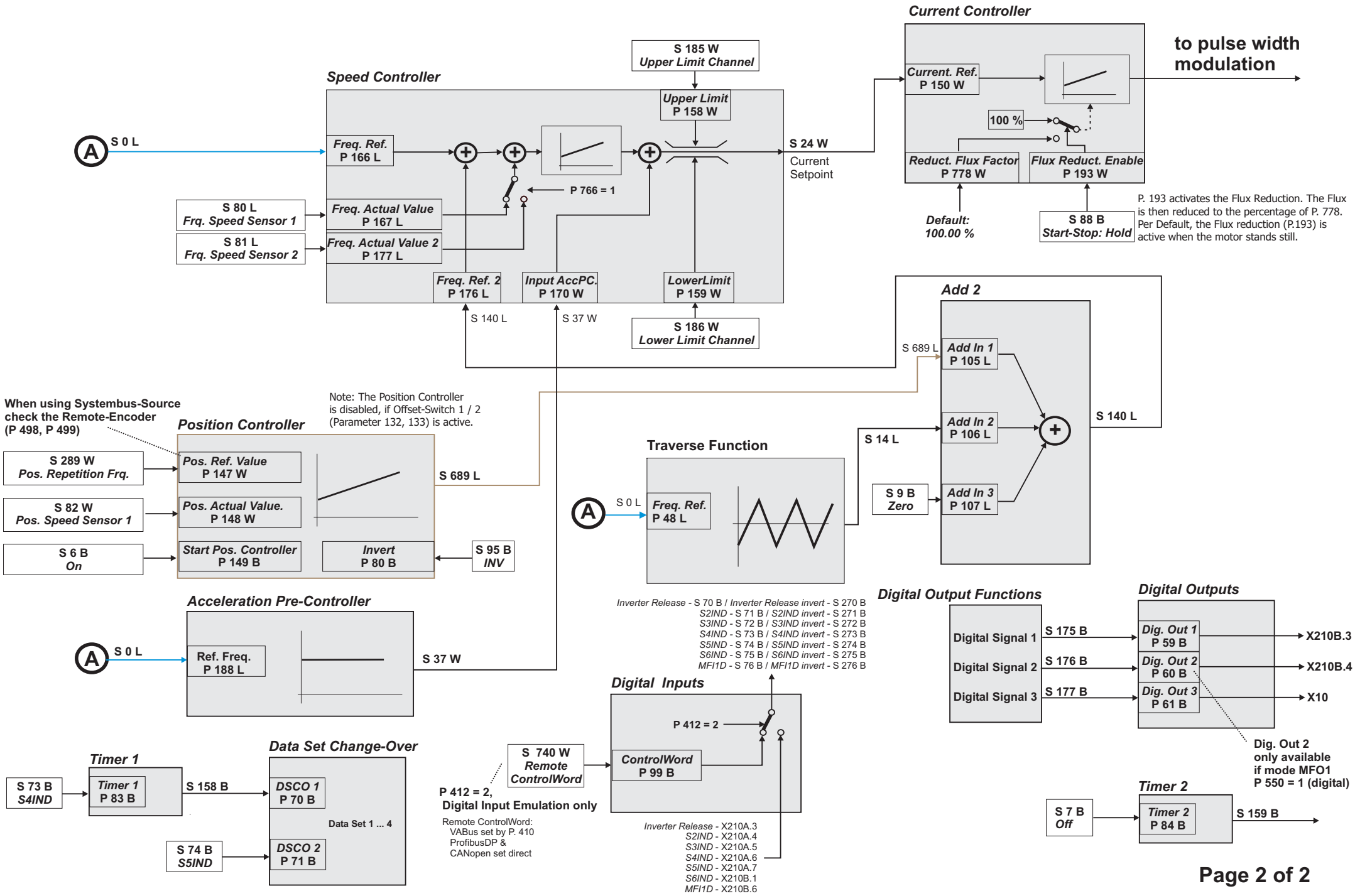
Signal Connections Configuration 215