Versatility for standard applications

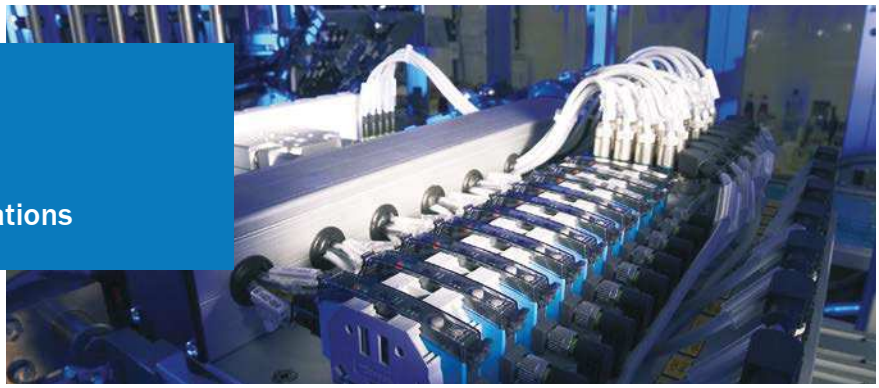

Product description

The WLL170-2 fiber-optic photoelectric sensor family features a standard operating system that is especially suitable for basic applications, but can be used when rapid response times are crucial. There are several variants. The WLL170(T) version is optimized for a number of key applications, such as detection of very small objects, colored marks, or transparent objects. The WLL170T-2 is a teach-in version where the switching threshold can be set either automatically by pressing a button or via a cable. In contrast, the WLL170-2 has a manual switching threshold adjustment via a potentiometer. Both models are available in a high-speed version with a switching frequency of 10 kHz for extremely fast response times. For optimum detection of color contrasts, you can choose between devices with a red or green LED emitter. Detection tasks are handled securely and reliably using the LL3 series of fiber-optic cables.

At a glance

- Rapid response time (50 µs)
- Switching threshold adjustment via potentiometer, or teach-in via button or cable
- Four different teach-in modes
- Simple installation
- Red or green LED emitter

Your benefits

- Reliable, rapid process detection
- Low installation costs due to short commissioning time
- Flexible teach-in modes allow the sensor to be customized according to the specific application
- Emitted light ideal for color or contrast detection
- Easy programming via simple potentiometer and switch adjustment

Additional information

→ **www.mysick.com/en/WLL170-2**

For more information, just enter the link or scan the QR code and get direct access to technical data, CAD design models, operating instructions, software, application examples and much more.

Detailed technical data

Features

	WLL170-2	WLL170T-2
Sensor principle	Fiber-optic photoelectric sensor	
Dimensions (W x H x D)	10.5 mm x 35.5 mm x 83.7 mm	
Housing design (light emission)	Rectangular	
Sensing range max.	0 mm ... 4,000 mm, through-beam system [1] (depending on type)	0 mm ... 3,500 mm, through-beam system [1] (depending on type)
Sensing range	0 mm ... 160 mm, proximity system [2] 0 mm ... 700 mm, through-beam system [3] (depending on type)	0 mm ... 160 mm, proximity system [2] 0 ... 700 mm, through-beam system [3] (depending on type)
Type of light	Visible red light/Green light (depending on type)	
Light source [4]	LED	
Wave length		
Visible red light	660 nm	
Green light	520 nm	525 nm
Teach-in	Potentiometer, 10-turn [5]	Teach-in-button, cable
Time type	Off-delayed	
Delay time	Selectable by sliding switch: ≤ 40 ms	
Indication	LED	

[1] LL3-TB02 and tip adapter LL3-TA01.
[2] Objects to be sensed with 90% reflectivity (based on DIN 5033 white standard). Sensing range depends on fiber-optic cable.
[3] LL3-tB01.
[4] Average service life of 100,000 h at T_A = +25 °C.
[5] Scale 270°.

Mechanics/electronics

	WLL170-2	WLL170T-2
Supply voltage [1]	10 V DC ... 30 V DC	
Ripple [2]	10 %	
Power consumption [3]	≤ 30 mA	
Output type	PNP, open collector/NPN, open collector (depending on type)	
Switching mode	Light/dark-switching (selectable via light/dark selector)	
Output current $I_{max.}$	≤ 100 mA	
Response time	≤ 0.25 ms [4] ≤ 50 µs [4] (depending on type)	
Switching frequency [5]		
Response time ≤ 0,25 ms [4]	2,000 Hz	
Response time ≤ 50 µs [4]	10,000 Hz	
Connection type	Cable, 2 m [6]/Male connector, M8 (depending on type)	
Circuit protection	A [7], B [8], C [9], D [10]	
Protection class	III	

J

	WLL170-2	WLL170T-2
Housing material	ABS/PC	ABS
Enclosure rating [11]	IP 66	
Ambient operating temperature	–25 °C ... +55 °C	
Ambient storage temperature	–40 °C ... +70 °C	

[1] Limit values.
[2] May not exceed or fall short of V_S tolerances.
[3] Without load.
[4] Signal transit time with resistive load.
[5] With light/dark ratio 1:1.
[6] Do not bend below 0 °C.
[7] A = V_S connections reverse-polarity protected.
[8] B = inputs and output reverse-polarity protected.
[9] C = interference suppression.
[10] D = outputs overcurrent and short-circuit protected.
[11] With correctly attached fibre-optic cable LL3 and closed protection hood.

Ordering information

Other models available at www.mysick.com/en/WLL170-2

WLL170-2

- **Adjustment:** Potentiometer, 10-turn (Scale 270°.)

Type of light	Response time	Sensing range max. [1]	Switching mode	Connection	Connection diagram	Model name	Part no.
Visible red light	≤ 0.25 ms	0 mm ... 4,000 mm, through-beam system	PNP	Cable, 3-wire, 2 m	Cd-043	WLL170-2P132	6029511
				Male connector, M8, 3-pin	Cd-045	WLL170-2P330	6029513
				Male connector, M8, 4-pin	Cd-066	WLL170-2P430	6029514
			NPN	Cable, 3-wire, 2 m	Cd-043	WLL170-2N132	6029515
				Male connector, M8, 3-pin	Cd-045	WLL170-2N330	6029517
				Male connector, M8, 4-pin	Cd-066	WLL170-2N430	6029518
Green light	≤ 0.25 ms	0 mm ... 1,700 mm, through-beam system	PNP	Cable, 3-wire, 2 m	Cd-043	WLL170-2P192	6029519
				Male connector, M8, 3-pin	Cd-045	WLL170-2P390	6029521
				Male connector, M8, 4-pin	Cd-066	WLL170-2P490	6029522
			NPN	Cable, 3-wire, 2 m	Cd-043	WLL170-2N192	6029523
				Male connector, M8, 3-pin	Cd-045	WLL170-2N390	6029525
				Male connector, M8, 4-pin	Cd-066	WLL170-2N490	6029526
Visible red light	≤ 50 µs	0 mm ... 1,600 mm, through-beam system	PNP	Cable, 3-wire, 2 m	Cd-043	WLL170-2P162	6029527
				Male connector, M8, 3-pin	Cd-045	WLL170-2P360	6029529
				Male connector, M8, 4-pin	Cd-066	WLL170-2P460	6029530
			NPN	Cable, 3-wire, 2 m	Cd-043	WLL170-2N162	6029531
				Male connector, M8, 3-pin	Cd-045	WLL170-2N360	6029533
				Male connector, M8, 4-pin	Cd-066	WLL170-2N460	6029534

[1] LL3-TB02 and tip adapter LL3-TA01.

WLL170T-2

Type of light	Response time	Sensing range max. [1]	Switching mode	Adjustment	Connection	Con-nection diagram	Model name	Part no.
Visible red light	≤ 0.25 ms	0 mm ... 3,500 mm, through-beam system	PNP	Teach-in button, Cable	Cable, 4-wire, 2 m	Cd-093	WLL170T-2P132	6033948
					Male connector, M8, 4-pin	Cd-092	WLL170T-2P430	6033950
				Teach-in button	Male connector, M8, 3-pin	Cd-045	WLL170T-2P330	6033949
			NPN	Teach-in button, Cable	Cable, 4-wire, 2 m	Cd-093	WLL170T-2N132	6033951
					Male connector, M8, 4-pin	Cd-092	WLL170T-2N430	6033953
				Teach-in button	Male connector, M8, 3-pin	Cd-045	WLL170T-2N330	6033952
Green light	≤ 0.25 ms	0 mm ... 1,600 mm, through-beam system	PNP	Teach-in button, Cable	Cable, 4-wire, 2 m	Cd-093	WLL170T-2P192	6033954
					Male connector, M8, 4-pin	Cd-092	WLL170T-2P490	6033956
				Teach-in button	Male connector, M8, 3-pin	Cd-045	WLL170T-2P390	6033955
			NPN	Teach-in button, Cable	Cable, 4-wire, 2 m	Cd-093	WLL170T-2N192	6033957
					Male connector, M8, 4-pin	Cd-092	WLL170T-2N490	6033959
				Teach-in button	Male connector, M8, 3-pin	Cd-045	WLL170T-2N390	6033958
Visible red light	≤ 50 µs	0 mm ... 1,500 mm, through-beam system	PNP	Teach-in button, Cable	Cable, 4-wire, 2 m	Cd-093	WLL170T-2P162	6033963
					Male connector, M8, 4-pin	Cd-092	WLL170T-2P460	6033965
				Teach-in button	Male connector, M8, 3-pin	Cd-045	WLL170T-2P360	6033964
			NPN	Teach-in button, Cable	Cable, 4-wire, 2 m	Cd-093	WLL170T-2N162	6033960
					Male connector, M8, 4-pin	Cd-092	WLL170T-2N460	6033962
				Teach-in button	Male connector, M8, 3-pin	Cd-045	WLL170T-2N360	6033961

[1] LL3-TB02 and tip adapter LL3-TA01.

Dimensional drawings

Dimensions in mm (inch)

WLL170-2

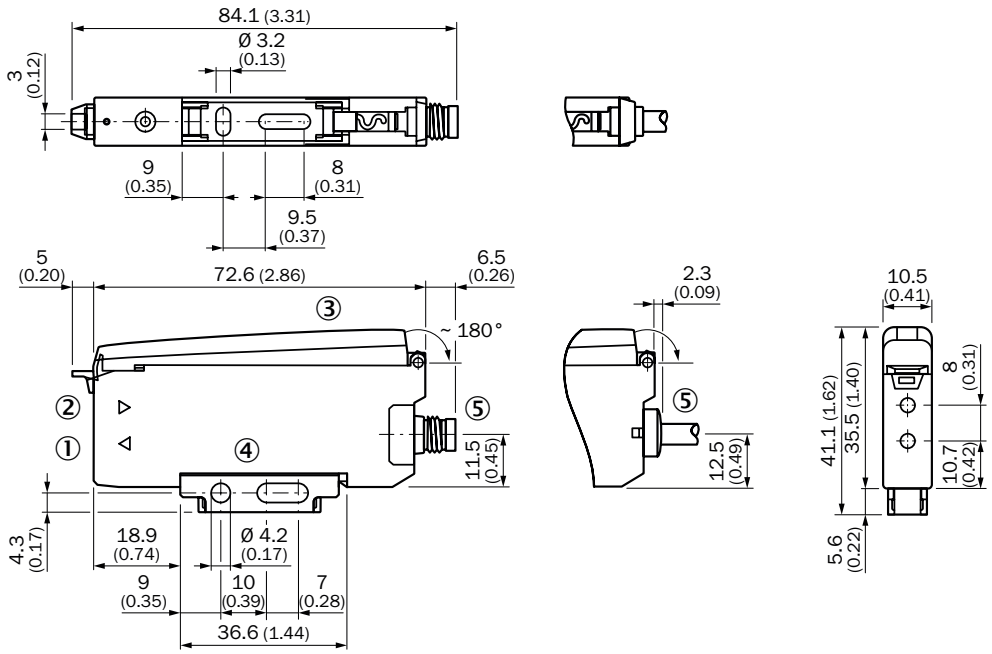

① Sender LED, installation of LL3 fibre-optic cable (sender fibre)
② Receiver, installation of LL3 fibre optic cable (receiver fibre)
③ Protective hood, can be raised at both ends
④ Mounting bracket, included
⑤ Connection

J

WLL170T-2

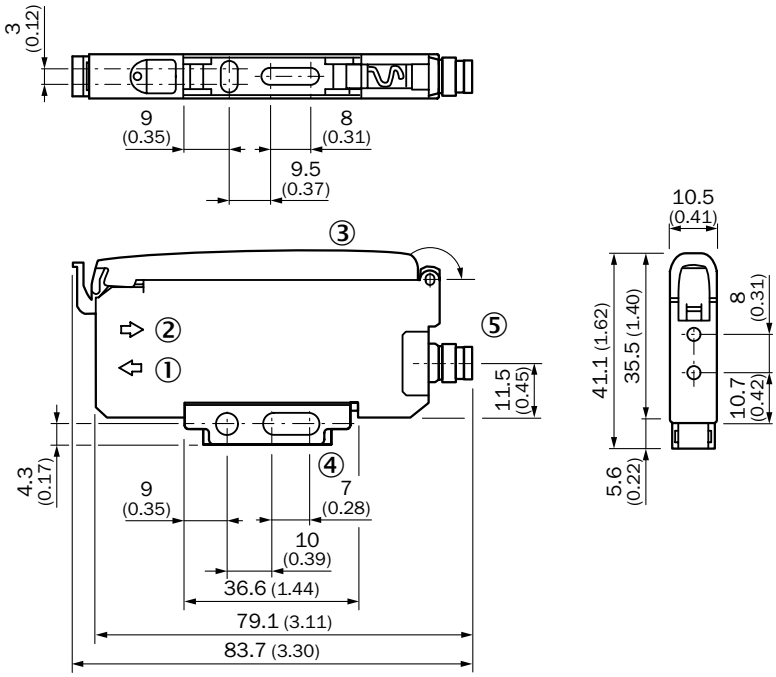

① Sender LED, installation of LL3 fibre-optic cable (sender fibre)
② Receiver, installation of LL3 fibre optic cable (receiver fibre)
③ Protective hood, can be raised at both ends
④ Mounting bracket, included
⑤ Connection

Adjustments

WLL170-2

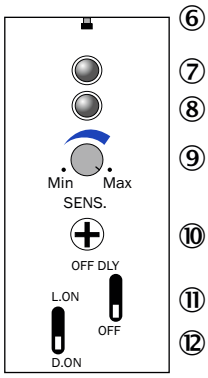

⑥ Indication of correct fibre-optic cable mounting
⑦ LED indicator orange, lights up when switching output is active
⑧ LED signal strength indicator green, lights up, when light received< 0.9 or >1.1 (switching threshold = 1)
⑨ Sensitivity scale 270°
⑩ Sensitivity control (10 revolutions)
⑪ L.ON/ d.ON selection switch. “OFF DLY” (on) / “OFF”, 40 ms fixed
⑫ Selector switch: “L.ON” (light-switching) /“D.ON” (dark-switching)

WLL170T-2

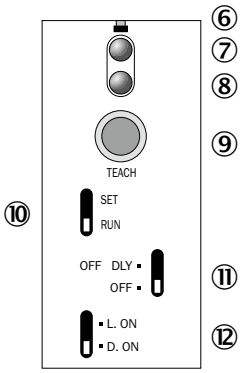

⑥ Indication of correct fibre-optic cable mounting
⑦ LED indicator orange: switching output active
⑧ LED signal strength indicator green, lights up, when light received< 0.9 or >1.1 (switching threshold = 1)
⑨ Teach-in button
⑩ Operating mode selector switch: “SET” (Teach-in mode) /“RUN” (sensor mode)
⑪ L.ON/ d.ON selection switch. “OFF DLY” (on) / “OFF”, 40 ms fixed
⑫ Selector switch: “L.ON” (light-switching) /“D.ON” (dark-switching)

J

Connection diagram

Cd-043

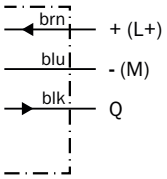

Cd-045

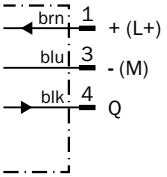

Cd-066

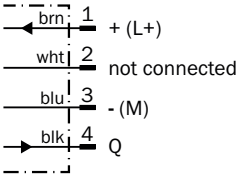

Cd-092

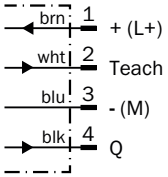

Cd-093

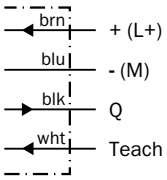

Function diagram

WLL170T-2

WLL170T-2 in sensor mode

Operating mode selector switch in RUN mode (after setting the switching threshold by means of Teach-in.

Orange LED display: lights up if supply connection Q is active. Dependent on setting of light/dark-selector switch.

Green LED display: lights up if light received is < 0.9 or > 1.1 (based on the switching threshold Q, switching threshold = 1).

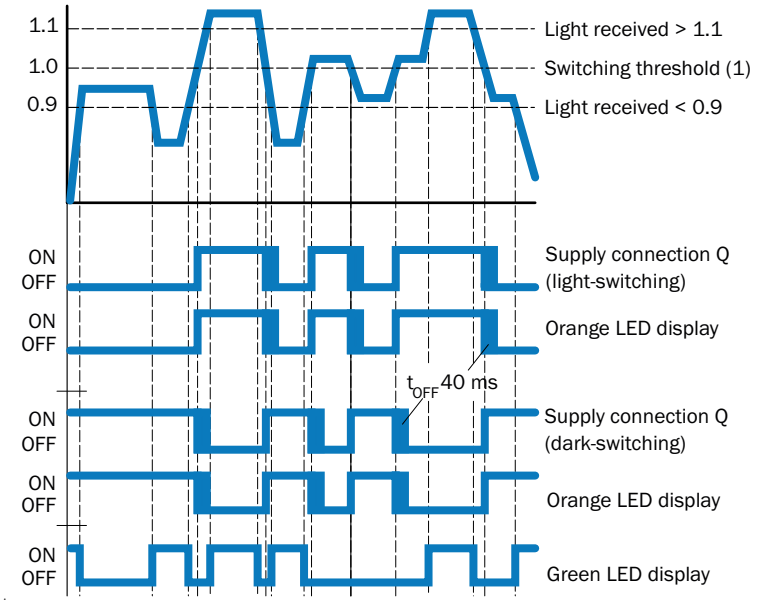

Recommended accessories

Mounting brackets/plates

Mounting brackets

Figure	Material	Description	Model name	Part no.
	Steel, zinc coated	Mounting bracket	BEF-WLL170	5306574

Plug connectors and cables

Connecting cable (female connector-open)

- **Cable material:** PVC
- **Enclosure rating:** IP 67, IP 69K

Figure	Connection type head A	Connection type head B	Connecting cable	Connector material	Model name	Part no.
	Female connector, M8, 3-pin, straight	Cable, open conductor heads	2 m, 3-wire	TPU	DOL-0803-G02M	6010785
			5 m, 3-wire	TPU	DOL-0803-G05M	6022009
	Female connector, M8, 3-pin, angled	Cable, open conductor heads	2 m, 3-wire	TPU	DOL-0803-W02M	6008489
			5 m, 3-wire	TPU	DOL-0803-W05M	6022010
	Female connector, M8, 4-pin, straight	Cable, open conductor heads	2 m, 4-wire	PVC	DOL-0804-G02M	6009870
			5 m, 4-wire	PVC	DOL-0804-G05M	6009872
	Female connector, M8, 4-pin, angled	Cable, open conductor heads	2 m, 4-wire	PVC	DOL-0804-W02M	6009871
			5 m, 4-wire	PVC	DOL-0804-W05M	6009873

Female connector (ready to assemble)

Figure	Connection type head A	Connection type head B	Connector material	Description	Model name	Part no.
	Female connector, M8, 3-pin, straight	Screw-type terminals	PBT	IP 67	DOS-0803-G	7902077
	Female connector, M8, 3-pin, angled	Pin penetration	PBT	IP 67	DOS-0803-W	7902078
	Female connector, M8, 4-pin, straight	Screw-type terminals	PBT	IP 67	DOS-0804-G	6009974
	Female connector, M8, 4-pin, angled	Pin penetration	PBT	IP 67	DOS-0804-W	6009975

Male connector (ready to assemble)

Figure	Connection type head A	Connection type head B	Connector material	Description	Model name	Part no.
	Male connector, M8, 3-pin, straight	Screw-type terminals	PBT	IP 67	STE-0803-G	6037322
	Male connector, M8, 4-pin, straight	Screw-type terminals	PBT	IP 67	STE-0804-G	6037323

J