A wide variety of solutions to your most challenging applications: SICK's fiber-optic cables

Product description

For any application-oriented sensor solution, a suitable fiber-optic cable must be chosen. At SICK, the broad range of fiber-optic cables made from plastic and glass fibers permits optimal automation solutions. This applies in particular to tasks for which the fiber-optic cable requires application-specific adaption, where flexible cable installation is crucial, where high temperatures prevail, or a particular material compatibility is important. While the fibers of plastic fiber-optic cables are characterized, among other things, by the smallest of bend radii and maximum flexibility, and can also be shortened to any length, the glass fiber-optic cables are more chemically resistant and suitable for a higher temperature range. The wide variety of end sleeve options or individual special sleeves enable virtually any installation possibility. Depending on the application, the fiber-optic cable's protective cladding can be made from plastic, metal, or Teflon for exposure to aggressive chemicals.

At a glance

- Very large selection of plastic and glass fiber-optic cables.
- Fiber-optic cables resistant to chemicals and high temperature
- Threaded and smooth sleeves, bands of light (array), 90° reflection versions available
- Focused optics
- Proximity and through-beam versions available
- Plastic, protective metal or Teflon sheathing available

Your benefits

- Very large selection of fiber-optic cables with plastic and glass fibers, giving users more application flexibility
- Resistant to damage caused by mechanical and chemical stress, as well as high temperatures
- Standard and customer-specific types
- Simple installation saves time
- For detection of objects, surfaces, leading edges, and fluid levels

J

CE

Additional information

Selection chart J-805
Ordering information. J-806
Dimensional drawings J-833
Recommended accessories. J-855

→ **www.mysick.com/en/LL3**

For more information, just enter the link or scan the QR code and get direct access to technical data, CAD design models, operating instructions, software, application examples and much more.

Selection chart

Detection principle	Category	Ordering information (page)	Dimensional drawing (page)
Proximity system	Threaded sleeve	J-806	J-833
	Smooth sleeve	J-808	J-835
	90° deflection	J-809	J-836
	Flat type	J-810	J-836
	Long end sleeve	J-812	J-839
	Area detection	J-814	J-841
	Heat-resistant	J-815	J-842
	Resistant to oil/chemicals	J-815	J-842
	LCDs/transparent objects/semiconductors	J-816	J-843
	Retro-reflective	J-816	J-843
	Liquid level	J-817	J-844
	Tip adapters	J-832	J-855
Through-beam system	Threaded sleeve	J-818	J-845
	Smooth sleeve	J-819	J-846
	90° deflection	J-820	J-847
	Flat type	J-821	J-848
	Long end sleeve	J-823	J-850
	Area detection	J-824	J-851
	Heat-resistant	J-825	J-852
	LCDs/transparent objects/semiconductors	J-826	J-854
	Resistant to oil/chemicals	J-827	J-854
	Liquid level	J-827	J-855
	Tip adapters	J-828	J-855

Ordering information

Other models available at www.mysick.com/en/LL3

Threaded sleeve

- **Detection principle:** Proximity system

Figure	Length	Minimal object diameter	Minimum bend radius	Fiber-optic cable cut-table	Sensing range with WLL180	Sensing range with WLL170	Model name	Part no.
	1,000 mm	≥ 0.02 mm	10 mm	–	14 mm [1] 49 mm [2] 99 mm [3] 190 mm [4] 210 mm [5]	60 mm [6] 27 mm [7] 17 mm [8]	LL3-DJ01	5325989
					38 mm [1] 120 mm [2] 230 mm [3] 460 mm [4] 490 mm [5]	110 mm [6] 50 mm [7] 30 mm [8]	LL3-DJ02	5325992
		≥ 0.015 mm	4 mm	✔	18 mm [1] 50 mm [2] 90 mm [3] 200 mm [4] 370 mm [5]	22 mm [6] 9 mm [7] 3 mm [8]	LL3-DR02	5308079
	2,000 mm	≥ 0.015 mm	4 mm	✔	18 mm [1] 60 mm [2] 100 mm [3] 220 mm [4] 360 mm [5]	37 mm [6] 11 mm [7] 5 mm [8]	LL3-DR06	5308082
			15 mm	✔	18 mm [1] 55 mm [2] 95 mm [3] 190 mm [4] 360 mm [5]	47 mm [6] 17 mm [7] 7 mm [8]	LL3-DS06	5308073
					40 mm [1] 130 mm [2] 200 mm [3] 350 mm [4] 600 mm [5]	75 mm [6] 22 mm [7] 11 mm [8]	LL3-DT01	5308076
			25 mm	✔	90 mm [1] 280 mm [2] 500 mm [3] 900 mm [4] 1,350 mm [5]	160 mm [6] 62 mm [7] 37 mm [8]	LL3-DB01	5308074
					90 mm [1] 300 mm [2] 500 mm [3] 900 mm [4] 1,350 mm [5]	160 mm [6] 62 mm [7] 37 mm [8]	LL3-DB03	5313021
					90 mm [1] 280 mm [2] 500 mm [3] 900 mm [4] 1,350 mm [5]	90 mm [6] 55 mm [7] 50 mm [8]	LL3-DB04	5325990

[1] Operating mode: 16 µs. [2] Operating mode: 70 µs. [3] Operating mode: 250 µs. [4] Operating mode: 2 ms. [5] Operating mode: 8 ms.
[6] Red light: 250 µs. [7] High speed: 50 µs. [8] Green light: 250 µs.

J

Figure	Length	Minimal object diameter	Minimum bend radius	Fiber-optic cable cut-table	Sensing range with WLL180	Sensing range with WLL170	Model name	Part no.
	2,000 mm	≥ 0.015 mm	25 mm	✔	100 mm [1] 300 mm [2] 500 mm [3] 900 mm [4] 1,400 mm [5]	165 mm [6] 65 mm [7] 37 mm [8]	LL3-DK06	5313019
			2 mm	✔	90 mm [1] 300 mm [2] 500 mm [3] 900 mm [4] 1,400 mm [5]	115 mm [6] 47 mm [7] 27 mm [8]	LL3-DK66	5313024
							LL3-DK67	5313025
			4 mm	✔	90 mm [1] 280 mm [2] 450 mm [3] 880 mm [4] 1,350 mm [5]	135 mm [6] 50 mm [7] 20 mm [8]	LL3-DR01	5308078
		≥ 0.02 mm	4 mm	✔	8 mm [1] 25 mm [2] 46 mm [3] 90 mm [4] 98 mm [5]	22 mm [6] 9 mm [7] 6 mm [8]	LL3-DR08	5326037
			15 mm	–	14 mm [1] 45 mm [2] 75 mm [3] 135 mm [4] 200 mm [5]	17 mm [6] 7 mm [7] 3 mm [8]	LL3-DK21	5313023
				✔	40 mm [1] 130 mm [2] 200 mm [3] 350 mm [4] 600 mm [5]	72 mm [6] 22 mm [7] 11 mm [8]	LL3-DM02	5308077
			25 mm	✔	27 mm [1] 88 mm [2] 165 mm [3] 330 mm [4] 350 mm [5]	65 mm [6] 30 mm [7] 20 mm [8]	LL3-DB07	5325988
				✔	75 mm [1] 255 mm [2] 420 mm [3] 800 mm [4] 1,300 mm [5]	165 mm [6] 65 mm [7] 37 mm [8]	LL3-DM01	5308071

[1] Operating mode: 16 µs. [2] Operating mode: 70 µs. [3] Operating mode: 250 µs. [4] Operating mode: 2 ms. [5] Operating mode: 8 ms.
[6] Red light: 250 µs. [7] High speed: 50 µs. [8] Green light: 250 µs.

→ **For dimensional drawings, please see page J-833**

Smooth sleeve

- **Detection principle:** Proximity system

Figure	Length	Minimal object diameter	Minimum bend radius	Fiber-optic cable cut-table	Sensing range with WLL180	Sensing range with WLL170	Model name	Part no.
	1,000 mm	≥ 0.015 mm	4 mm	–	20 mm [1] 70 mm [2] 110 mm [3] 220 mm [4] 360 mm [5]	25 mm [6] 9 mm [7] 3 mm [8]	LL3-DR04	5308081
		≥ 0.02 mm	10 mm	–	3 mm [2] 14 mm [3] 29 mm [4] 31 mm [5]	3.5 mm [6] 3.5 mm [7]	LL3-DP01	5325998
	2,000 mm	≥ 0.015 mm	2 mm	✔	65 mm [1] 200 mm [2] 350 mm [3] 650 mm [4] 1,000 mm [5]	115 mm [6] 47 mm [7] 27 mm [8]	LL3-DK4Z	5313026
			4 mm	✔	30 mm [1] 85 mm [2] 140 mm [3] 300 mm [4] 600 mm [5]	37 mm [6] 13 mm [7] 8 mm [8]	LL3-DR03	5308080
			15 mm	✔	18 mm [1] 55 mm [2] 95 mm [3] 190 mm [4] 360 mm [5]	47 mm [6] 17 mm [7] 7 mm [8]	LL3-DT03	5308072
			25 mm	✔	100 mm [1] 300 mm [2] 500 mm [3] 900 mm [4] 1,400 mm [5]	165 mm [6] 65 mm [7] 37 mm [8]	LL3-DK04	5313020
		≥ 0.02 mm	1 mm	✔	4 mm [1] 13 mm [2] 27 mm [3] 55 mm [4] 59 mm [5]	11 mm [6] 5 mm [7]	LL3-DR12	5326001
			2 mm	✔	22 mm [1] 74 mm [2] 140 mm [3] 280 mm [4] 300 mm [5]	65 mm [6] 30 mm [7] 20 mm [8]	LL3-DR11	5326000
			25 mm	✔	70 mm [1] 220 mm [2] 360 mm [3] 720 mm [4] 770 mm [5]	170 mm [6] 75 mm [7] 60 mm [8]	LL3-DB10	5325999

[1] Operating mode: 16 µs. [2] Operating mode: 70 µs. [3] Operating mode: 250 µs. [4] Operating mode: 2 ms. [5] Operating mode: 8 ms.
[6] Red light: 250 µs. [7] High speed: 50 µs. [8] Green light: 250 µs.

→ **For dimensional drawings, please see page J-835**

90° deflection

- **Detection principle:** Proximity system
- **Length:** 2,000 mm
- **Fiber-optic cable cuttable:** ✔

Figure	Minimal object diameter	Minimum bend radius	Sensing range with WLL180	Sensing range with WLL170	Model name	Part no.
	≥ 0.015 mm	2 mm	20 mm [1] 110 mm [2] 180 mm [3] 400 mm [4] 650 mm [5]	16 mm [6] 12 mm [7] 12 mm [8]	LL3-DV07	5322551
		25 mm	25 mm [1] 110 mm [2] 185 mm [3] 400 mm [4] 650 mm [5]	47 mm [6] 17 mm [7] 17 mm [8]	LL3-DV05	5322549
			30 mm [1] 130 mm [2] 210 mm [3] 450 mm [4] 800 mm [5]	47 mm [6] 12 mm [7] 12 mm [8]	LL3-DV06	5322550
	≥ 0.02 mm	25 mm	47 mm [1] 165 mm [2] 285 mm [3] 575 mm [4] 610 mm [5]	110 mm [6] 55 mm [7] 30 mm [8]	LL3-DB09	5325991

[1] Operating mode: 16 µs. [2] Operating mode: 70 µs. [3] Operating mode: 250 µs. [4] Operating mode: 2 ms. [5] Operating mode: 8 ms.
[6] Red light: 250 µs. [7] High speed: 50 µs. [8] Green light: 250 µs.

→ **For dimensional drawings, please see page J-836**

J

Flat type

- **Detection principle:** Proximity system

Figure	Length	Minimal object diameter	Minimum bend radius	Fiber-optic cable cut-table	Sensing range with WLL180	Sensing range with WLL170	Model name	Part no.
	1,000 mm	≥ 0.01 mm	1 mm	✔	13 mm [1] 48 mm [2] 86 mm [3] 170 mm [4] 180 mm [5]	35 mm [6] 15 mm [7] 12 mm [8]	LL3-DE02	5324497
		≥ 0.16 mm	1 mm	✔	11 mm [1] 38 mm [2] 78 mm [3] 150 mm [4] 160 mm [5]	35 mm [6] 8 mm [7]	LL3-DE01	5325285
		≥ 0.3 mm	1 mm	✔	2 mm [1] 4 mm [2] 6 mm [3] 9 mm [4] 10 mm [5]	4.5 mm [6] 2.5 mm [7] 2.5 mm [8]	LL3-DC08	5326029
	2,000 mm	–	4 mm	✔	15 mm [1] 22 mm [2] 23 mm [3] 25 mm [4] 25 mm [5]	15 mm [6] 15 mm [7] 10 mm [8]	LL3-DC06	5326017
		≥ 0.01 mm	1 mm	✔	12 mm [1] 25 mm [2] 37 mm [3] 75 mm [4] 90 mm [5]	30 mm [6] 10 mm [7] 5 mm [8]	LL3-DC47	5324268
					35 mm [1] 45 mm [2] 55 mm [3] 250 mm [4] 330 mm [5]	50 mm [6] 35 mm [7] 10 mm [8]	LL3-DC57	5324269
		≥ 0.02 mm	10 mm	✔	8 mm [1] 10 mm [2] 11 mm [3] 13 mm [4] 17 mm [5]	8 mm [6] 8 mm [7] 8 mm [8]	LL3-DC09	5326028
			25 mm	–	5 mm [1] 10 mm [2] 19 mm [3] 37 mm [4] 43 mm [5]	7 mm [6] 10.5 mm [7] 9 mm [8]	LL3-DH06	5326026
				✔	5 mm [1] 11 mm [2] 22 mm [3] 30 mm [4] 38 mm [5]	11 mm [6] 15.5 mm [7] 9.3 mm [8]	LL3-DH08	5326025

[1] Operating mode: 16 µs. [2] Operating mode: 70 µs. [3] Operating mode: 250 µs. [4] Operating mode: 2 ms. [5] Operating mode: 8 ms.
[6] Red light: 250 µs. [7] High speed: 50 µs. [8] Green light: 250 µs.

J

Figure	Length	Minimal object diameter	Minimum bend radius	Fiber-optic cable cut-table	Sensing range with WLL180	Sensing range with WLL170	Model name	Part no.
	2,000 mm	≥ 0.03 mm	1 mm	✔	45 mm [1] 130 mm [2] 250 mm [3] 510 mm [4] 550 mm [5]	110 mm [6] 43 mm [7] 31 mm [8]	LL3-DE03	5325986
					50 mm [1] 130 mm [2] 250 mm [3] 500 mm [4] 540 mm [5]	110 mm [6] 50 mm [7] 35 mm [8]	LL3-DE04	5325987
					110 mm [1] 345 mm [2] 560 mm [3] 1,100 mm [4] 1,190 mm [5]	300 mm [6] 120 mm [7] 80 mm [8]	LL3-DR09	5325528
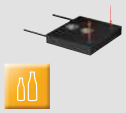		≥ 0.06 mm	10 mm	✔	8 mm [1] 12 mm [2] 14 mm [3] 16 mm [4] 18 mm [5]	10 mm [6] 8 mm [7] 8 mm [8]	LL3-DC07	5326019
	3,000 mm	–	4 mm	✔	18 mm [1] 31 mm [2] 34 mm [3] 38 mm [4] 38 mm [5]	20 mm [6] 20 mm [7] 15 mm [8]	LL3-DC04	5326018
		≥ 0.02 mm	25 mm	–	11 mm [1] 18 mm [2] 21 mm [3] 24 mm [4] 26 mm [5]	18 mm [6] 18 mm [7] 15 mm [8]	LL3-DH10	5326023
					19 mm [1] 29 mm [2] 34 mm [3] 39 mm [4] 42 mm [5]	24 mm [6] 24 mm [7] 24 mm [8]	LL3-DH11	5326024
	4,000 mm	≥ 0.3 mm	25 mm	✔	60 mm [1] 75 mm [2] 85 mm [3] 150 mm [4] 280 mm [5]	80 mm [6] 60 mm [7] 60 mm [8]	LL3-DC03	5326020

[1] Operating mode: 16 µs. [2] Operating mode: 70 µs. [3] Operating mode: 250 µs. [4] Operating mode: 2 ms. [5] Operating mode: 8 ms.
[6] Red light: 250 µs. [7] High speed: 50 µs. [8] Green light: 250 µs.

→ **For dimensional drawings, please see page J-836**

J

Long end sleeve

- **Detection principle:** Proximity system

Figure	Length	Minimal object diameter	Minimum bend radius	Fiber-optic cable cut-table	Sensing range with WLL180	Sensing range with WLL170	Model name	Part no.
	500 mm	≥ 0.015 mm	4 mm	✔	10 mm [1] 30 mm [2] 60 mm [3] 140 mm [4] 225 mm [5]	9 mm [6] 4 mm [7] 2 mm [8]	LL3-DT02	5308085
				–	13 mm [1] 45 mm [2] 80 mm [3] 140 mm [4] 280 mm [5]	9 mm [6] 4 mm [7] 2 mm [8]	LL3-DT04	5308086
					10 mm [1] 30 mm [2] 60 mm [3] 140 mm [4] 225 mm [5]	12 mm [6] 4 mm [7] 2 mm [8]	LL3-DR05	5308087
	1,000 mm	≥ 0.015 mm	25 mm	–	5 mm [1] 15 mm [2] 35 mm [3] 65 mm [4] 120 mm [5]	7 mm [6] 3 mm [7]	LL3-DR07	5326007
		≥ 0.02 mm	25 mm	–	8 mm [1] 25 mm [2] 52 mm [3] 100 mm [4] 110 mm [5]	22 mm [6] 6 mm [7] 6 mm [8]	LL3-DB05	5326002
					55 mm [1] 220 mm [2] 580 mm [3] 1,170 mm [4] 1,240 mm [5]	220 mm [6] 90 mm [7] 70 mm [8]	LL3-DH05	5326021
	2,000 mm	≥ 0.015 mm	2 mm	✔	90 mm [1] 300 mm [2] 500 mm [3] 900 mm [4] 1,400 mm [5]	115 mm [6] 47 mm [7] 27 mm [8]	LL3-DK63Z	5313027
			15 mm	✔	10 mm [1] 28 mm [2] 45 mm [3] 93 mm [4] 170 mm [5]	47 mm [6] 17 mm [7] 8 mm [8]	LL3-DK43	5313030
					10 mm [1] 25 mm [2] 45 mm [3] 90 mm [4] 170 mm [5]	50 mm [6] 17 mm [7] 8 mm [8]	LL3-DM03	5308084
					10 mm [1] 28 mm [2] 45 mm [3] 95 mm [4] 170 mm [5]	50 mm [6] 17 mm [7] 8 mm [8]	LL3-DT05	5313028

[1] Operating mode: 16 µs. [2] Operating mode: 70 µs. [3] Operating mode: 250 µs. [4] Operating mode: 2 ms. [5] Operating mode: 8 ms.
[6] Red light: 250 µs. [7] High speed: 50 µs. [8] Green light: 250 µs.

Figure	Length	Minimal object diameter	Minimum bend radius	Fiber-optic cable cut-table	Sensing range with WLL180	Sensing range with WLL170	Model name	Part no.
	2,000 mm	≥ 0.015 mm	15 mm	✔	10 mm [1] 35 mm [2] 70 mm [3] 125 mm [4] 290 mm [5]	16 mm [6] 3 mm [7] 3 mm [8]	LL3-DV02	5308089
			25 mm	✔	100 mm [1] 350 mm [2] 580 mm [3] 850 mm [4] 1,300 mm [5]	170 mm [6] 67 mm [7] 42 mm [8]	LL3-DB02	5308083
		≥ 0.02 mm	1 mm	✔	12 mm [1] 40 mm [2] 77 mm [3] 150 mm [4] 160 mm [5]	35 mm [6] 15 mm [7] 9 mm [8]	LL3-DR10	5326005
			25 mm	✔	60 mm [1] 210 mm [2] 360 mm [3] 700 mm [4] 760 mm [5]	150 mm [6] 60 mm [7] 40 mm [8]	LL3-DB06	5326006
					17 mm [1] 55 mm [2] 107 mm [3] 200 mm [4] 220 mm [5]	45 mm [6] 18 mm [7] 13 mm [8]	LL3-DB08	5326004
				–	65 mm [1] 225 mm [2] 500 mm [3] 1,000 mm [4] 1,060 mm [5]	350 mm [6] 120 mm [7] 90 mm [8]	LL3-DH04	5326022
		≥ 0.025 mm	25 mm	✔	35 mm [1] 135 mm [2] 170 mm [3] 290 mm [4] 320 mm [5]	95 mm [6] 41 mm [7] 27 mm [8]	LL3-DK33	5313031
		≥ 0.025 mm	25 mm	✔	40 mm [1] 135 mm [2] 180 mm [3] 270 mm [4] 330 mm [5]	95 mm [6] 41 mm [7] 22 mm [8]	LL3-DV01	5308088
					35 mm [1] 135 mm [2] 170 mm [3] 290 mm [4] 320 mm [5]	95 mm [6] 41 mm [7] 22 mm [8]	LL3-DV03	5308090

[1] Operating mode: 16 µs. [2] Operating mode: 70 µs. [3] Operating mode: 250 µs. [4] Operating mode: 2 ms. [5] Operating mode: 8 ms.
[6] Red light: 250 µs. [7] High speed: 50 µs. [8] Green light: 250 µs.

→ **For dimensional drawings, please see page J-839**

J

Area detection

- **Detection principle:** Proximity system
- **Length:** 2,000 mm
- **Minimal object diameter:** ≥ 0.02 mm
- **Minimum bend radius:** 25 mm
- **Fiber-optic cable cuttable:** ✔

Figure	Sensing range with WLL180	Sensing range with WLL170	Model name	Part no.
	65 mm [1] 240 mm [2] 320 mm [3] 650 mm [4] 690 mm [5]	–	LL3-DZ01	5326013
	57 mm [1] 190 mm [2] 310 mm [3] 630 mm [4] 670 mm [5]	150 mm [6] 70 mm [7] 50 mm [8]	LL3-DZ02	5326014
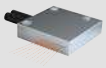	50 mm [1] 160 mm [2] 280 mm [3] 450 mm [4] 590 mm [5]	110 mm [6] 55 mm [7] 35 mm [8]	LL3-DZ03	5326015

[1] Operating mode: 16 µs. [2] Operating mode: 70 µs. [3] Operating mode: 250 µs. [4] Operating mode: 2 ms. [5] Operating mode: 8 ms.
[6] Red light: 250 µs. [7] High speed: 50 µs. [8] Green light: 250 µs.

→ **For dimensional drawings, please see page J-841**

J

Heat-resistant

- **Detection principle:** Proximity system

Figure	Length	Minimal object diameter	Minimum bend radius	Fiber-optic cable cut-table	Sensing range with WLL180	Sensing range with WLL170	Model name	Part no.
	1,000 mm	≥ 0.02 mm	25 mm	–	65 mm [1] 260 mm [2] 670 mm [3] 1,340 mm [4] 1,430 mm [5]	220 mm [6] 100 mm [7] 70 mm [8]	LL3-DH07	5326031
					20 mm [1] 50 mm [2] 95 mm [3] 150 mm [4] 400 mm [5]	–	LL3-DW01	5315234
	2,000 mm	≥ 0.015 mm	25 mm	✔	70 mm [1] 230 mm [2] 350 mm [3] 600 mm [4] 1,000 mm [5]	125 mm [6] 45 mm [7] 8 mm [8]	LL3-DH02	5308092
			35 mm	✔	120 mm [1] 350 mm [2] 600 mm [3] 980 mm [4] 1,500 mm [5]	220 mm [6] 95 mm [7] 45 mm [8]	LL3-DH01	5308091
		≥ 0.02 mm	25 mm	–	55 mm [1] 220 mm [2] 490 mm [3] 990 mm [4] 1,050 mm [5]	170 mm [6] 80 mm [7] 50 mm [8]	LL3-DH03	5324787
				✔	70 mm [1] 230 mm [2] 370 mm [3] 750 mm [4] 800 mm [5]	220 mm [6] 90 mm [7] 70 mm [8]	LL3-DH09	5326030

[1] Operating mode: 16 µs. [2] Operating mode: 70 µs. [3] Operating mode: 250 µs. [4] Operating mode: 2 ms. [5] Operating mode: 8 ms.
[6] Red light: 250 µs. [7] High speed: 50 µs. [8] Green light: 250 µs.

→ **For dimensional drawings, please see page J-842**

Resistant to oil/chemicals

- **Detection principle:** Proximity system

Figure	Length	Minimal object diameter	Minimum bend radius	Sensing range with WLL180	Sensing range with WLL170	Model name	Part no.
	2,000 mm	≥ 0.02 mm	60 mm	100 mm [1] 180 mm [2] 200 mm [3] 150 mm [4] 280 mm [5]	50 mm [6] 27 mm [7] 12 mm [8]	LL3-DY01	5308093

[1] Operating mode: 16 µs. [2] Operating mode: 70 µs. [3] Operating mode: 250 µs. [4] Operating mode: 2 ms. [5] Operating mode: 8 ms.
[6] Red light: 250 µs. [7] High speed: 50 µs. [8] Green light: 250 µs.

→ **For dimensional drawings, please see page J-842**

LCDs/transparent objects/semiconductors

- **Detection principle:** Proximity system
- **Fiber-optic cable cuttable:** ✔

Figure	Length	Minimal object diameter	Minimum bend radius	Sensing range with WLL180	Sensing range with WLL170	Model name	Part no.
	2,000 mm	≥ 0.02 mm	10 mm	6 mm [1] 6 mm [2] 6 mm [3] 10 mm [4] 15 mm [5]	7 mm [6] 7 mm [7] 6 mm [8]	LL3-DC38	5322472
				4 mm [2] 4 mm [3] 4 mm [4] 4 mm [5]	5 mm [6] 4 mm [7] 4 mm [8]	LL3-DC39	5322513
	3,000 mm	≥ 25 mm	25 mm	18 mm [1] 29 mm [2] 35 mm [3] 40 mm [4] 43 mm [5]	22 mm [6] 22 mm [7] 25 mm [8]	LL3-DC05	5326016

[1] Operating mode: 16 µs. [2] Operating mode: 70 µs. [3] Operating mode: 250 µs. [4] Operating mode: 2 ms. [5] Operating mode: 8 ms.
[6] Red light: 250 µs. [7] High speed: 50 µs. [8] Green light: 250 µs.

→ **For dimensional drawings, please see page J-843**

Retro-reflective

- **Detection principle:** Proximity system
- **Length:** 2,000 mm
- **Fiber-optic cable cuttable:** ✔

Figure	Minimal object diameter	Minimum bend radius	Sensing range with WLL180	Sensing range with WLL170	Model name	Part no.
	≥ 0.06 mm	10 mm	105 mm [1] 190 mm [2] 230 mm [3] 460 mm [4] 490 mm [5]	220 mm [6] 80 mm [7] 65 mm [8]	LL3-RB01	5326010
			100 mm [1] 170 mm [2] 210 mm [3] 430 mm [4] 460 mm [5]	220 mm [6] 80 mm [7] 65 mm [8]	LL3-RB02	5326011
	≥ 0.12 mm	10 mm	80 mm [1] 200 mm [2] 310 mm [3] 620 mm [4] 660 mm [5]	–	LL3-RG01	5326012
	≥ 0.3 mm	1 mm	290 mm [1] 580 mm [2] 720 mm [3] 1,450 mm [4] 1,550 mm [5]	650 mm [6] 250 mm [7] 180 mm [8]	LL3-RR01	5326008

[1] Operating mode: 16 µs. [2] Operating mode: 70 µs. [3] Operating mode: 250 µs. [4] Operating mode: 2 ms. [5] Operating mode: 8 ms.
[6] Red light: 250 µs. [7] High speed: 50 µs. [8] Green light: 250 µs.

→ **For dimensional drawings, please see page J-843**

Liquid level

- **Detection principle:** Proximity system

Figure	Length	Minimum bend radius	Fiber-optic cable cuttable	Model name	Part no.
	2,000 mm	10 mm	✔	LL3-DF04	5326035
				LL3-DF05	5326034
				LL3-DF07	5326033
		30 mm	✔	LL3-DF02-S01	5321924
	5,000 mm	20 mm	✔	LL3-DW02	5325608

→ **For dimensional drawings, please see page J-844**

J

Threaded sleeve

- **Detection principle:** Through-beam system

Figure	Length	Minimal object diameter	Minimum bend radius	Fiber-optic cable cut-table	Sensing range with WLL180	Sensing range with WLL170	Model name	Part no.
	1,000 mm	≥ 0.05 mm	10 mm	–	145 mm [1] 460 mm [2] 830 mm [3] 1,600 mm [4] 1,770 mm [5]	40 mm [6] 120 mm [7] 150 mm [8]	LL3-TJ01	5325915
	2,000 mm	≥ 0.1 mm	4 mm	✔	60 mm [1] 175 mm [2] 330 mm [3] 750 mm [4] 1,100 mm [5]	115 mm [6] 38 mm [7] 23 mm [8]	LL3-TR02	5308053
			15 mm	✔	55 mm [1] 175 mm [2] 300 mm [3] 700 mm [4] 1,100 mm [5]	125 mm [6] 45 mm [7] 30 mm [8]	LL3-TM02	5308069
		≥ 0.2 mm	2 mm	✔	220 mm [1] 650 mm [2] 1,200 mm [3] 2,750 mm [4] 4,000 mm [5]	370 mm [6] 125 mm [7] 120 mm [8]	LL3-TK77	5313035
			25 mm	✔	225 mm [1] 650 mm [2] 1,200 mm [3] 2,500 mm [4] 4,000 mm [5]	470 mm [6] 165 mm [7] 135 mm [8]	LL3-TB02	5308048
					220 mm [1] 680 mm [2] 1,200 mm [3] 2,500 mm [4] 4,000 mm [5]	470 mm [6] 165 mm [7] 135 mm [8]	LL3-TM01	5308068
		≥ 0.3 mm	4 mm	✔	200 mm [1] 600 mm [2] 1,000 mm [3] 2,400 mm [4] 4,000 mm [5]	340 mm [6] 125 mm [7] 125 mm [8]	LL3-TR01	5308052
		≥ 0.5 mm	30 mm	✔	300 mm [1] 950 mm [2] 1,700 mm [3] 3,500 mm [4] 4,000 mm [5]	720 mm [6] 315 mm [7] 280 mm [8]	LL3-TB01	5308050
	10,000 mm	≥ 0.4 mm	25 mm	✔	6,600 mm [1] 19,500 mm [2] 19,500 mm [3] 19,500 mm [4] 19,500 mm [5]	19,500 mm [6] 7,500 mm [7] 6,000 mm [8]	LL3-TB08	5325917
	20,000 mm	≥ 0.5 mm	25 mm	✔	2,000 mm [1] 7,500 mm [2] 13,500 mm [3] 27,000 mm [4] 40,000 mm [5]	3,000 mm [6] 1,300 mm [7] 1,200 mm [8]	LL3-TX02	5325046

[1] Operating mode: 16 µs. [2] Operating mode: 70 µs. [3] Operating mode: 250 µs. [4] Operating mode: 2 ms. [5] Operating mode: 8 ms.
[6] Red light: 250 µs. [7] High speed: 50 µs. [8] Green light: 250 µs.

→ **For dimensional drawings, please see page J-845**

Smooth sleeve

- **Detection principle:** Through-beam system

Figure	Length	Minimal object diameter	Minimum bend radius	Fiber-optic cable cut-table	Sensing range with WLL180	Sensing range with WLL170	Model name	Part no.
	500 mm	≥ 0.02 mm	4 mm	–	5 mm [1] 17 mm [2] 28 mm [3] 56 mm [4] 60 mm [5]	12 mm [6] 5 mm [7] 5 mm [8]	LL3-TR04	5325918
	1,000 mm	≥ 0.1 mm	4 mm	✔	60 mm [1] 175 mm [2] 330 mm [3] 750 mm [4] 1,100 mm [5]	115 mm [6] 38 mm [7] 23 mm [8]	LL3-TR03	5308054
		≥ 10 mm	10 mm	✔	6 mm [1] 19 mm [2] 38 mm [3] 74 mm [4] 130 mm [5]	18 mm [6] 7 mm [7] 11 mm [8]	LL3-TH06	5325926
	2,000 mm	≥ 0.02 mm	1 mm	✔	13 mm [1] 50 mm [2] 85 mm [3] 170 mm [4] 180 mm [5]	25 mm [6] 12 mm [7] 12 mm [8]	LL3-TG05	5325921
					380 mm [1] 1,220 mm [2] 2,000 mm [3] 4,000 mm [4] 4,000 mm [5]	800 mm [6] 250 mm [7] 250 mm [8]	LL3-TR10	5325920
		≥ 0.03 mm	25 mm	✔	180 mm [1] 540 mm [2] 890 mm [3] 1,700 mm [4] 1,900 mm [5]	400 mm [6] 190 mm [7] 200 mm [8]	LL3-TB07	5325919
		≥ 0.05 mm	25 mm	✔	590 mm [1] 1,790 mm [2] 2,400 mm [3] 4,000 mm [4] 4,000 mm [5]	1,100 mm [6] 600 mm [7] 500 mm [8]	LL3-TV08	5325922
		≥ 0.1 mm	15 mm	✔	55 mm [1] 175 mm [2] 300 mm [3] 700 mm [4] 1,100 mm [5]	125 mm [6] 45 mm [7] 30 mm [8]	LL3-TM03	5308070
		≥ 0.2 mm	2 mm	✔	220 mm [1] 650 mm [2] 1,200 mm [3] 2,750 mm [4] 4,000 mm [5]	370 mm [6] 125 mm [7] 120 mm [8]	LL3-TK05	5313034
		≥ 0.5 mm	30 mm	✔	275 mm [1] 1,000 mm [2] 1,800 mm [3] 3,500 mm [4] 4,000 mm [5]	720 mm [6] 315 mm [7] 280 mm [8]	LL3-TS07	5308049

[1] Operating mode: 16 µs. [2] Operating mode: 70 µs. [3] Operating mode: 250 µs. [4] Operating mode: 2 ms. [5] Operating mode: 8 ms.
[6] Red light: 250 µs. [7] High speed: 50 µs. [8] Green light: 250 µs.

→ **For dimensional drawings, please see page J-846**

90° deflection

- **Detection principle:** Through-beam system

Figure	Length	Minimal object diameter	Minimum bend radius	Fiber-optic cable cut-table	Sensing range with WLL180	Sensing range with WLL170	Model name	Part no.
	2,000 mm	≥ 0.04 mm	1 mm	✔	360 mm [1] 1,200 mm [2] 2,200 mm [3] 4,000 mm [4] 4,000 mm [5]	900 mm [6] 500 mm [7] 450 mm [8]	LL3-TR09	5325985
		≥ 0.05 mm	25 mm	✔	150 mm [1] 480 mm [2] 770 mm [3] 1,500 mm [4] 1,600 mm [5]	400 mm [6] 170 mm [7] 150 mm [8]	LL3-TB06	5325916
		≥ 0.06 mm	1 mm	✔	160 mm [1] 480 mm [2] 800 mm [3] 1,600 mm [4] 1,700 mm [5]	350 mm [6] 170 mm [7] 150 mm [8]	LL3-TR08	5325984
		≥ 0.1 mm	50 mm	–	18 mm [1] 30 mm [2] 120 mm [3] 220 mm [4] 420 mm [5]	23 mm [6] 23 mm [7]	LL3-TH07	5325977
		≥ 0.16 mm	25 mm	✔	90 mm [1] 290 mm [2] 480 mm [3] 970 mm [4] 1,000 mm [5]	170 mm [6] 75 mm [7] 110 mm [8]	LL3-TH15	5325975
							LL3-TH16	5325976
		≥ 0.4 mm	25 mm	✔	350 mm [1] 750 mm [2] 1,800 mm [3] 4,000 mm [4] 4,000 mm [5]	400 mm [6] 170 mm [7] 150 mm [8]	LL3-TV05	5322546
					180 mm [1] 550 mm [2] 900 mm [3] 2,100 mm [4] 3,500 mm [5]	350 mm [6] 150 mm [7] 150 mm [8]	LL3-TV06	5322547
			2 mm	✔	340 mm [1] 1,000 mm [2] 1,800 mm [3] 4,000 mm [4] 4,000 mm [5]	290 mm [6] 150 mm [7] 150 mm [8]	LL3-TV07	5322548
	3,000 mm	≥ 0.3 mm	20 mm	✔	460 mm [1] 1,400 mm [2] 2,500 mm [3] 4,000 mm [4] 4,000 mm [5]	1,000 mm [6] 350 mm [7] 450 mm [8]	LL3-TY03	5325982

[1] Operating mode: 16 µs. [2] Operating mode: 70 µs. [3] Operating mode: 250 µs. [4] Operating mode: 2 ms. [5] Operating mode: 8 ms.
[6] Red light: 250 µs. [7] High speed: 50 µs. [8] Green light: 250 µs.

→ **For dimensional drawings, please see page J-847**

Flat type

- **Detection principle:** Through-beam system
- **Fiber-optic cable cuttable:** ✔

Figure	Length	Minimal object diameter	Minimum bend radius	Sensing range with WLL180	Sensing range with WLL170	Model name	Part no.
	1,000 mm	≥ 0.08 mm	1 mm	120 mm [1] 350 mm [2] 620 mm [3] 1,250 mm [4] 1,330 mm [5]	250 mm [6] 120 mm [7] 120 mm [8]	LL3-TE01	5325807
				40 mm [1] 140 mm [2] 220 mm [3] 450 mm [4] 480 mm [5]	130 mm [6] 60 mm [7] 50 mm [8]	LL3-TE02	5325910
	2,000 mm	≥ 0.03 mm	1 mm	150 mm [1] 440 mm [2] 700 mm [3] 1,400 mm [4] 1,490 mm [5]	320 mm [6] 160 mm [7] 120 mm [8]	LL3-TE04	5325911
			4 mm	150 mm [1] 460 mm [2] 840 mm [3] 1,680 mm [4] 1,780 mm [5]	350 mm [6] 140 mm [7] 240 mm [8]	LL3-TE05	5325914
				360 mm [1] 1,300 mm [2] 2,300 mm [3] 4,000 mm [4] 4,000 mm [5]	1,200 mm [6] 500 mm [7] 750 mm [8]	LL3-TR05	5325808
				560 mm [1] 1,600 mm [2] 2,200 mm [3] 4,000 mm [4] 4,000 mm [5]	1,200 mm [6] 500 mm [7] 750 mm [8]	LL3-TR06	5325912

[1] Operating mode: 16 µs. [2] Operating mode: 70 µs. [3] Operating mode: 250 µs. [4] Operating mode: 2 ms. [5] Operating mode: 8 ms.
[6] Red light: 250 µs. [7] High speed: 50 µs. [8] Green light: 250 µs.

J

Figure	Length	Minimal object diameter	Minimum bend radius	Sensing range with WLL180	Sensing range with WLL170	Model name	Part no.
	2,000 mm	≥ 0.04 mm	1 mm	250 mm [1] 730 mm [2] 1,280 mm [3] 2,560 mm [4] 2,730 mm [5]	600 mm [6] 300 mm [7] 400 mm [8]	LL3-TR13	5325909
		≥ 0.05 mm	1 mm	600 mm [1] 1,400 mm [2] 2,300 mm [3] 4,000 mm [4] 4,000 mm [5]	1,400 mm [6] 650 mm [7] 600 mm [8]	LL3-TR12	5325907
		≥ 0.08 mm	1 mm	590 mm [1] 1,500 mm [2] 2,200 mm [3] 4,000 mm [4] 4,000 mm [5]	1,800 mm [6] 800 mm [7] 750 mm [8]	LL3-TR11	5325906
				190 mm [1] 580 mm [2] 980 mm [3] 1,970 mm [4] 2,100 mm [5]	500 mm [6] 250 mm [7] 200 mm [8]	LL3-TE03	5325908

[1] Operating mode: 16 µs. [2] Operating mode: 70 µs. [3] Operating mode: 250 µs. [4] Operating mode: 2 ms. [5] Operating mode: 8 ms.
[6] Red light: 250 µs. [7] High speed: 50 µs. [8] Green light: 250 µs.

→ **For dimensional drawings, please see page J-848**

J

Long end sleeve

- **Detection principle:** Through-beam system

Figure	Length	Minimal object diameter	Minimum bend radius	Fiber-optic cable cut-table	Sensing range with WLL180	Sensing range with WLL170	Model name	Part no.
	500 mm	≥ 0.02 mm	5 mm	–	2 mm [1] 8 mm [2] 14 mm [3] 28 mm [4] 30 mm [5]	5 mm [6] 3 mm [7] 3 mm [8]	LL3-TP01	5325925
	2,000 mm	≥ 0.03 mm	25 mm	✔	50 mm [1] 140 mm [2] 250 mm [3] 500 mm [4] 530 mm [5]	120 mm [6] 60 mm [7] 60 mm [8]	LL3-TB05	5325924
		≥ 0.1 mm	15 mm	✔	10 mm [1] 30 mm [2] 60 mm [3] 140 mm [4] 200 mm [5]	32 mm [6] 13 mm [7] 5 mm [8]	LL3-TT01	5308057
					30 mm [1] 130 mm [2] 250 mm [3] 550 mm [4] 800 mm [5]	77 mm [6] 27 mm [7] 16 mm [8]	LL3-TV02	5308059
							LL3-TV04	5308060
		≥ 0.2 mm	25 mm	✔	240 mm [1] 700 mm [2] 1,400 mm [3] 2,500 mm [4] 2,900 mm [5]	470 mm [6] 165 mm [7] 132 mm [8]	LL3-TB03	5308056
					180 mm [1] 600 mm [2] 1,100 mm [3] 2,500 mm [4] 3,300 mm [5]	2,050 mm [6] 950 mm [7] 850 mm [8]	LL3-TK16	5313038
					170 mm [1] 500 mm [2] 1,000 mm [3] 2,300 mm [4] 3,000 mm [5]	355 mm [6] 125 mm [7] 115 mm [8]	LL3-TS08	5308061
					120 mm [1] 400 mm [2] 800 mm [3] 1,800 mm [4] 2,750 mm [5]	325 mm [6] 115 mm [7] 87 mm [8]	LL3-TV01	5308058
		≥ 0.5 mm	25 mm	✔	170 mm [1] 550 mm [2] 1,000 mm [3] 2,300 mm [4] 3,000 mm [5]	1,800 mm [6] 840 mm [7] 760 mm [8]	LL3-TS12	5308062

[1] Operating mode: 16 µs. [2] Operating mode: 70 µs. [3] Operating mode: 250 µs. [4] Operating mode: 2 ms. [5] Operating mode: 8 ms.
[6] Red light: 250 µs. [7] High speed: 50 µs. [8] Green light: 250 µs.

→ **For dimensional drawings, please see page J-846**

J

Area detection

- **Detection principle:** Through-beam system
- **Length:** 2,000 mm
- **Fiber-optic cable cuttable:** ✔

Figure	Minimal object diameter	Minimum bend radius	Sensing range with WLL180	Sensing range with WLL170	Model name	Part no.
	≥ 0.25 mm	1 mm	1,300 mm [1] 2,500 mm [2] 3,000 mm [3] 3,500 mm [4] 4,000 mm [5]	2,000 mm [6] 1,000 mm [7] 800 mm [8]	LL3-TZ09	5326598
		10 mm	1,700 mm [1] 2,500 mm [2] 3,000 mm [3] 3,500 mm [4] 4,000 mm [5]	2,800 mm [6] 1,200 mm [7] 800 mm [8]	LL3-TZ10	5326599
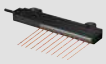	≥ 0.4 mm	2 mm	3,000 mm [1] 4,000 mm [2] 4,000 mm [3] 4,000 mm [4] 4,000 mm [5]	4,000 mm [6] 1,300 mm [7] 1,600 mm [8]	LL3-TS40	5323971
	≥ 0.45 mm	25 mm	150 mm [1] 450 mm [2] 740 mm [3] 1,400 mm [4] 1,500 mm [5]	350 mm [6] 150 mm [7] 250 mm [8]	LL3-TZ05	5325937
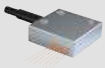			150 mm [1] 480 mm [2] 790 mm [3] 1,500 mm [4] 1,600 mm [5]	350 mm [6] 150 mm [7] 250 mm [8]	LL3-TZ06	5325938
	≥ 0.5 mm	25 mm	130 mm [1] 400 mm [2] 800 mm [3] 2,000 mm [4] 3,500 mm [5]	335 mm [6] 125 mm [7] 90 mm [8]	LL3-TS14	5313039
	≥ 1 mm	25 mm	130 mm [1] 400 mm [2] 800 mm [3] 2,000 mm [4] 3,500 mm [5]	335 mm [6] 125 mm [7] 90 mm [8]	LL3-TS10	5308063

[1] Operating mode: 16 µs. [2] Operating mode: 70 µs. [3] Operating mode: 250 µs. [4] Operating mode: 2 ms. [5] Operating mode: 8 ms.
[6] Red light: 250 µs. [7] High speed: 50 µs. [8] Green light: 250 µs.

→ **For dimensional drawings, please see page J-851**

Heat-resistant

- **Detection principle:** Through-beam system

Figure	Length	Minimal object diameter	Minimum bend radius	Fiber-optic cable cut-table	Sensing range with WLL180	Sensing range with WLL170	Model name	Part no.
	1,000 mm	≥ 0.02 mm	10 mm	–	50 mm [1] 180 mm [2] 300 mm [3] 600 mm [4] 640 mm [5]	130 mm [6] 50 mm [7] 80 mm [8]	LL3-TH10	5325970
		≥ 0.04 mm	25 mm	–	130 mm [1] 400 mm [2] 700 mm [3] 1,400 mm [4] 1,500 mm [5]	320 mm [6] 130 mm [7] 200 mm [8]	LL3-TH11	5325971
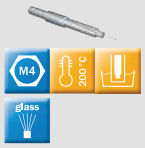					80 mm [1] 230 mm [2] 350 mm [3] 560 mm [4] 980 mm [5]	–	LL3-TW01	5315233
	2,000 mm	≥ 0.04 mm	25 mm	–	150 mm [1] 480 mm [2] 790 mm [3] 1,500 mm [4] 1,600 mm [5]	350 mm [6] 140 mm [7] 240 mm [8]	LL3-TH08	5325978
					140 mm [1] 460 mm [2] 700 mm [3] 1,400 mm [4] 1,500 mm [5]	350 mm [6] 140 mm [7] 240 mm [8]	LL3-TH09	5325979
		≥ 0.06 mm	25 mm	✔	230 mm [1] 690 mm [2] 1,100 mm [3] 2,300 mm [4] 2,400 mm [5]	600 mm [6] 250 mm [7] 400 mm [8]	LL3-TH17	5325967
		≥ 0.12 mm	25 mm	✔	100 mm [1] 330 mm [2] 570 mm [3] 1,100 mm [4] 1,200 mm [5]	250 mm [6] 100 mm [7] 170 mm [8]	LL3-TH12	5325972
							LL3-TH13	5325973
							LL3-TH14	5325974
		≥ 0.2 mm	25 mm	✔	55 mm [1] 180 mm [2] 320 mm [3] 680 mm [4] 1,000 mm [5]	305 mm [6] 125 mm [7] 50 mm [8]	LL3-TH01	5308064
		≥ 0.5 mm	35 mm	✔	230 mm [1] 700 mm [2] 1,300 mm [3] 2,700 mm [4] 4,000 mm [5]	620 mm [6] 255 mm [7] 125 mm [8]	LL3-TH02	5308065

[1] Operating mode: 16 µs. [2] Operating mode: 70 µs. [3] Operating mode: 250 µs. [4] Operating mode: 2 ms. [5] Operating mode: 8 ms.
[6] Red light: 250 µs. [7] High speed: 50 µs. [8] Green light: 250 µs.

→ **For dimensional drawings, please see page J-852**

J

LCDs/transparent objects/semiconductors

- **Detection principle:** Through-beam system
- **Length:** 2,000 mm
- **Fiber-optic cable cuttable:** ✔

Figure	Minimal object diameter	Minimum bend radius	Sensing range with WLL180	Sensing range with WLL170	Model name	Part no.
	≥ 0.02 mm	10 mm	100 mm [1] 290 mm [2] 500 mm [3] 1,000 mm [4] 1,100 mm [5]	250 mm [6] 120 mm [7] 120 mm [8]	LL3-TG04	5324499
	≥ 0.05 mm	10 mm	220 mm [1] 760 mm [2] 1,500 mm [3] 2,900 mm [4] 4,000 mm [5]	625 mm [6] 400 mm [7] 300 mm [8]	LL3-TS22M	5325968
		25 mm	390 mm [1] 1,300 mm [2] 2,600 mm [3] 4,000 mm [4] 4,000 mm [5]	850 mm [6] 500 mm [7] 400 mm [8]	LL3-TS22	5325944
	≥ 0.06 mm	1 mm	580 mm [1] 1,670 mm [2] 2,400 mm [3] 4,000 mm [4] 4,000 mm [5]	1,100 mm [6] 450 mm [7] 700 mm [8]	LL3-TG02	5325943
		25 mm	880 mm [1] 2,300 mm [2] 3,500 mm [3] 4,000 mm [4] 4,000 mm [5]	2,500 mm [6] 1,300 mm [7] 1,600 mm [8]	LL3-TG01	5325940
			570 mm [1] 1,980 mm [2] 2,400 mm [3] 4,000 mm [4] 4,000 mm [5]	1,000 mm [6] 450 mm [7] 700 mm [8]	LL3-TG03	5325942

[1] Operating mode: 16 µs. [2] Operating mode: 70 µs. [3] Operating mode: 250 µs. [4] Operating mode: 2 ms. [5] Operating mode: 8 ms.
[6] Red light: 250 µs. [7] High speed: 50 µs. [8] Green light: 250 µs.

→ **For dimensional drawings, please see page J-854**

J

Resistant to oil/chemicals

- **Detection principle:** Through-beam system

Figure	Length	Minimal object diameter	Minimum bend radius	Fiber-optic cable cut-table	Sensing range with WLL180	Sensing range with WLL170	Model name	Part no.
	2,000 mm	≥ 0.3 mm	60 mm	–	400 mm [1] 1,200 mm [2] 2,100 mm [3] 4,000 mm [4] 4,000 mm [5]	2,000 mm [6] 415 mm [7] 390 mm [8]	LL3-TY01	5308066
					300 mm [1] 1,000 mm [2] 1,300 mm [3] 3,000 mm [4] 4,000 mm [5]	620 mm [6] 225 mm [7] 210 mm [8]	LL3-TY02	5308067
		≥ 4 mm	25 mm	✔	850 mm [1] 2,700 mm [2] 3,000 mm [3] 4,000 mm [4] 4,000 mm [5]	2,200 mm [6] 800 mm [7] 1,300 mm [8]	LL3-TY05	5325980
	2,500 mm	≥ 0.3 mm	30 mm	✔	740 mm [1] 2,400 mm [2] 3,000 mm [3] 4,000 mm [4] 4,000 mm [5]	2,200 mm [6] 800 mm [7] 1,300 mm [8]	LL3-TY04	5325981

[1] Operating mode: 16 µs. [2] Operating mode: 70 µs. [3] Operating mode: 250 µs. [4] Operating mode: 2 ms. [5] Operating mode: 8 ms.
[6] Red light: 250 µs. [7] High speed: 50 µs. [8] Green light: 250 µs.

→ **For dimensional drawings, please see page J-854**

Liquid level

- **Detection principle:** Through-beam system

Figure	Length	Minimum bend radius	Model name	Part no.
	2,000 mm	20 mm	LL3-TF01	5324242

→ **For dimensional drawings, please see page J-855**

J

Tip adapters through-beam system

Suitable for amplifier WLL170-2

Figure	Tempera-ture	LL model name/sensing range (mm)											
		LL3-TB01		LL3-TB01-10		LL3-TB01-30		LL3-TB02		LL3-TB06		LL3-TH01	
	-40 °C – +100 °C	▬ ▬ ■	3000 [1] 1200 [2] 1100 [3]	▬ ▬ ■	1800 [1] 700 [2] 600 [3]	▬ ▬ ■	1000 [1] 400 [2] 200 [3]	▬ ▬ ■	3500 [1] 1400 [2] 1200 [3]	▬ ▬ ■	3500 [1] 1400 [2] 1200 [3]	▬ ▬ ■	3500 [1] 1400 [2] 1200 [3]
	-40 °C – +100 °C	▬ ▬ ■	3000 [1] 1200 [2] 800 [3]	▬ ▬ ■	1800 [1] 700 [2] 500 [3]	▬ ▬ ■	1000 [1] 400 [2] 200 [3]	▬ ▬ ■	3500 [1] 1400 [2] 1000 [3]	▬ ▬ ■	3500 [1] 1400 [2] 1000 [3]	▬ ▬ ■	3500 [1] 1400 [2] 1000 [3]
	-40 °C – +70 °C	▬ ▬ ■	600 [1] 230 [2] 100 [3]	▬ ■	360 [1] 130 [2]	▬ ■	200 [1] 80 [2]	▬ ▬ ■	600 [1] 230 [2] 100 [3]		–		–
	-40 °C – +350 °C	▬ ▬ ■	3500 [1] 1400 [2] 1000 [3]	▬ ▬ ■	2100 [1] 850 [2] 600 [3]	▬ ▬ ■	1200 [1] 500 [2] 200 [3]	▬ ▬ ■	3500 [1] 1400 [2] 1000 [3]	▬ ▬ ■	3500 [1] 1400 [2] 1000 [3]	▬ ▬ ■	3500 [1] 1400 [2] 1000 [3]
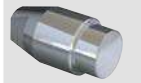	-60 °C – +350 °C	▬ ▬ ■	3500 [1] 1400 [2] 1000 [3]	▬ ▬ ■	2100 [1] 850 [2] 600 [3]	▬ ▬ ■	1200 [1] 500 [2] 200 [3]	▬ ▬ ■	3500 [1] 1400 [2] 1000 [3]	▬ ▬ ■	3500 [1] 1400 [2] 1000 [3]	▬ ▬ ■	3500 [1] 1400 [2] 1000 [3]
	-60 °C – +300 °C	▬ ■	500 [1] 200 [2]	▬ ■	300 [1] 100 [2]	▬ ■	180 [1] 70 [2]	▬ ■	500 [1] 200 [2] 80 [3]		–	▬ ■	400 [1] 150 [2]

[1] Red light: 250 µs [2] Highspeed: 50 µs [3] Green light: 250 µs
Mounting material included.

Suitable for amplifier WLL180T

Figure	Tempera-ture	LL model name/sensing range (mm)											
		LL3-TB01		LL3-TB01-10		LL3-TB01-30		LL3-TB02		LL3-TB06		LL3-TH01	
	-40 °C – +100 °C	■ ▬ ▬ ▬ ▬	800 [1] 2500 [2] 4000 [3] 4000 [4] 4000 [5]	■ ▬ ▬ ▬ ▬	720 [1] 2250 [2] 3600 [3] 3600 [4] 3600 [5]	■ ▬ ▬ ▬ ▬	570 [1] 1800 [2] 2880 [3] 2880 [4] 2880 [5]	■ ▬ ▬ ▬ ▬	1800 [1] 4000 [2] 4000 [3] 4000 [4] 4000 [5]	▬ ▬ ▬ ▬ ▬	1500 [1] 4000 [2] 4000 [3] 4000 [4] 4000 [5]	■ ▬ ▬ ▬ ▬	500 [1] 1400 [2] 2500 [3] 4000 [4] 4000 [5]
	-40 °C – +100 °C	■ ▬ ▬ ▬ ▬	800 [1] 2500 [2] 4000 [3] 4000 [4] 4000 [5]	■ ▬ ▬ ▬ ▬	720 [1] 2250 [2] 3600 [3] 3600 [4] 3600 [5]	■ ▬ ▬ ▬ ▬	570 [1] 1800 [2] 2880 [3] 2880 [4] 2880 [5]	▬ ▬ ▬ ▬ ▬	1800 [1] 4000 [2] 4000 [3] 4000 [4] 4000 [5]	▬ ▬ ▬ ▬ ▬	1500 [1] 4000 [2] 4000 [3] 4000 [4] 4000 [5]	■ ▬ ▬ ▬ ▬	500 [1] 1400 [2] 2500 [3] 4000 [4] 4000 [5]
	-40 °C – +70 °C	■ ■ ▬ ▬ ▬	200 [1] 650 [2] 1200 [3] 2500 [4] 3600 [5]	■ ■ ▬ ▬ ▬	180 [1] 585 [2] 1080 [3] 2250 [4] 3240 [5]	■ ■ ▬ ▬ ▬	150 [1] 460 [2] 860 [3] 1800 [4] 2600 [5]	■ ■ ▬ ▬ ▬	300 [1] 1000 [2] 1800 [3] 3500 [4] 4000 [5]		–		–
	-40 °C – +350 °C	■ ▬ ▬ ▬ ▬	360 [1] 2000 [2] 4000 [3] 4000 [4] 4000 [5]	■ ▬ ▬ ▬ ▬	324 [1] 1800 [2] 3600 [3] 3600 [4] 3600 [5]	■ ▬ ▬ ▬ ▬	260 [1] 1440 [2] 2880 [3] 2880 [4] 2880 [5]	▬ ▬ ▬ ▬ ▬	1200 [1] 4000 [2] 4000 [3] 4000 [4] 4000 [5]	▬ ▬ ▬ ▬ ▬	1200 [1] 4000 [2] 4000 [3] 4000 [4] 4000 [5]	▬ ▬ ▬ ▬ ▬	1200 [1] 2000 [2] 4000 [3] 4000 [4] 4000 [5]
	-60 °C – +350 °C	▬ ▬ ▬ ▬ ▬	4000 [1] 4000 [2] 4000 [3] 4000 [4] 4000 [5]	▬ ▬ ▬ ▬ ▬	3600 [1] 3600 [2] 3600 [3] 3600 [4] 3600 [5]	▬ ▬ ▬ ▬ ▬	2880 [1] 2880 [2] 2880 [3] 2880 [4] 2880 [5]	▬ ▬ ▬ ▬ ▬	4000 [1] 4000 [2] 4000 [3] 4000 [4] 4000 [5]	▬ ▬ ▬ ▬ ▬	4000 [1] 4000 [2] 4000 [3] 4000 [4] 4000 [5]	▬ ▬ ▬ ▬ ▬	4000 [1] 4000 [2] 4000 [3] 4000 [4] 4000 [5]

[1] Operating mode: 16 µs [2] Operating mode: 70 µs [3] Operating mode: 250 µs [4] Operating mode: 2 ms [5] Operating mode: 8 ms
Mounting material included.

J

LL model name/sensing range (mm)												Model name	Part no.
LL3-TH08		LL3-TH10		LL3-TH11		LL3-TJ01		LL3-TK77		LL3-TR01			
	–		–		–	▬	1500 [1]	▬	3500 [1]	▬	3000 [1]	LL3-TA01	5308128
						▬	600 [2]	▬	1400 [2]	▬	1200 [2]		
						■	400 [3]	■	1200 [3]	■	1000 [3]		
	–		–		–	▬	1500 [1]	▬	3500 [1]	▬	3000 [1]	LL3-TA01S	5326461
						▬	600 [2]	▬	1400 [2]	▬	1200 [2]		
						■	400 [3]	■	1100 [3]	■	1100 [3]		
	–		–		–	▬	500 [1]	▬	600 [1]	▬	500 [1]	LL3-TA02	5308129
						■	200 [2]	■	230 [2]	■	200 [2]		
▬	2100 [1]	▬	1500 [1]	▬	1500 [1]	▬	1500 [1]	▬	3500 [1]	▬	2500 [1]	LL3-TA03	5326462
▬	850 [2]	▬	600 [2]	▬	600 [2]	▬	600 [2]	▬	1400 [2]	▬	1000 [2]		
■	500 [3]	■	300 [3]	■	300 [3]	■	300 [3]	■	1000 [3]	■	700 [3]		
▬	3500 [1]	▬	1500 [1]	▬	1500 [1]	▬	1500 [1]	▬	3500 [1]	▬	3500 [1]	LL3-TA04	5326463
▬	1400 [2]	▬	600 [2]	▬	600 [2]	▬	600 [2]	▬	1400 [2]	▬	1400 [2]		
■	1000 [3]	■	300 [3]	■	250 [3]	■	250 [3]	■	1000 [3]	■	1100 [3]		
▬	350 [1]	▬	300 [1]	▬	350 [1]	▬	400 [1]	▬	400 [1]	▬	350 [1]	LL3-TA05	5326464
■	140 [2]	■	120 [2]	■	140 [2]	■	160 [2]	■	160 [2]	■	140 [2]		

LL model name/sensing range (mm)												Model name	Part no.
LL3-TH08		LL3-TH10		LL3-TH11		LL3-TJ01		LL3-TK77		LL3-TR01			
	–		–		–	■	750 [1]	▬	2000 [1]	▬	1800 [1]	LL3-TA01	5308128
						▬	2000 [2]	▬	4000 [2]	▬	4000 [2]		
						▬	2000 [3]	▬	4000 [3]	▬	4000 [3]		
						▬	2000 [4]	▬	4000 [4]	▬	4000 [4]		
						▬	2000 [5]	▬	4000 [5]	▬	4000 [5]		
	–		–		–	■	650 [1]	▬	2000 [1]	▬	1800 [1]	LL3-TA01S	5326461
						▬	2000 [2]	▬	4000 [2]	▬	4000 [2]		
						▬	2000 [3]	▬	4000 [3]	▬	4000 [3]		
						▬	2000 [4]	▬	4000 [4]	▬	4000 [4]		
						▬	2000 [5]	▬	4000 [5]	▬	4000 [5]		
	–		–		–	■	200 [1]	■	300 [1]	■	200 [1]	LL3-TA02	5308129
						■	600 [2]	■	950 [2]	■	900 [2]		
						▬	950 [3]	▬	1800 [3]	▬	1500 [3]		
						▬	1900 [4]	▬	3500 [4]	▬	3300 [4]		
						▬	4000 [5]	▬	4000 [5]	▬	4000 [5]		
■	800 [1]	■	750 [1]	■	1000 [1]	■	600 [1]	■	600 [1]	■	800 [1]	LL3-TA03	5326462
▬	2000 [2]	▬	2000 [2]	▬	2000 [2]	▬	2000 [2]	▬	2000 [2]	▬	2000 [2]		
▬	4000 [3]	▬	2000 [3]	▬	2000 [3]	▬	2000 [3]	▬	4000 [3]	▬	4000 [3]		
▬	4000 [4]	▬	2000 [4]	▬	2000 [4]	▬	2000 [4]	▬	4000 [4]	▬	4000 [4]		
▬	4000 [5]	▬	2000 [5]	▬	2000 [5]	▬	2000 [5]	▬	4000 [5]	▬	4000 [5]		
▬	4000 [1]	▬	2000 [1]	▬	2000 [1]	▬	2000 [1]	▬	4000 [1]	▬	4000 [1]	LL3-TA04	5326463
▬	4000 [2]	▬	2000 [2]	▬	2000 [2]	▬	2000 [2]	▬	4000 [2]	▬	4000 [2]		
▬	4000 [3]	▬	2000 [3]	▬	2000 [3]	▬	2000 [3]	▬	4000 [3]	▬	4000 [3]		
▬	4000 [4]	▬	2000 [4]	▬	2000 [4]	▬	2000 [4]	▬	4000 [4]	▬	4000 [4]		
▬	4000 [5]	▬	2000 [5]	▬	2000 [5]	▬	2000 [5]	▬	4000 [5]	▬	4000 [5]		

J

Figure	Tempera-ture	LL model name/sensing range (mm)												
		LL3-TB01		LL3-TB01-10		LL3-TB01-30		LL3-TB02		LL3-TB06		LL3-TH01		
	-60 °C – +300 °C	▪	250 [1]	▪	225 [1]	▪	180 [1]	▪	250 [1]		–	▪	160 [1]	
		▪	800 [2]	▪	720 [2]	▪	570 [2]	▪	800 [2]			▪	450 [2]	
		▬	1200 [3]	▬	1080 [3])	▬	860 [3]	▬	1200 [3]			▬	800 [3]	
		▬	2400 [4]	▬	2160 [4]	▬	1700 [4]	▬	2400 [4]			▬	1500 [4]	
		▬	4000 [5]	▬	3600 [5]	▬	2880 [5]	▬	4000 [5]			▬	4000 [5]	

[1] Operating mode: 16 µs [2] Operating mode: 70 µs [3] Operating mode: 250 µs [4] Operating mode: 2 ms [5] Operating mode: 8 ms
Mounting material included.

➜ **For dimensional drawings, please see page J-855**

J

	LL model name/sensing range (mm)												Model name	Part no.
	LL3-TH08		LL3-TH10		LL3-TH11		LL3-TJ01		LL3-TK77		LL3-TR01			
	▪	170 [1]	▪	100 [1]	▪	150 [1]	▪	200 [1]	▪	200 [1]	▪	160 [1]	LL3-TA05	5326464
	■	550 [2]	■	300 [2]	■	400 [2]	■	600 [2]	■	600 [2]	■	550 [2]		
	▬	800 [3]	▬	600 [3]	▬	700 [3]	▬	950 [3]	▬	950 [3]	▬	850 [3]		
	▬	1600 [4]	▬	1100 [4]	▬	1400 [4]	▬	1900 [4]	▬	1900 [4]	▬	1700 [4]		
	▬	4000 [5]	▬	2000 [5]	▬	4000 [5]	▬	4000 [5]	▬	4000 [5]	▬	4000 [5]		

J

Tip adapters proximity system

Figure	Temperature	Light spot size			Focal length [mm]	Model name	Part no.
		LL3-DK21	LL3-DT01	LL3-DM02			
	- 40 °C – +70 °C	Ø 0.2 mm	Ø 0.4 mm	–	6	LL3-DA01	5308127
	- 40 °C – + 70 °C	Ø 1.2 mm	Ø 1.4 mm	–	15	LL3-DA02	5308130
	- 20 °C – + 60 °C	Ø 0.2 mm	Ø 0.4 mm	–	7	LL3-DA03	5326465
	- 40 °C – + 70 °C	Ø 0.3 mm	Ø 0.5 mm	–	7,5	LL3-DA04	5326466
	- 40 °C – + 70 °C	–	–	Ø 0.5 mm	6	LL3-DA05	5326467
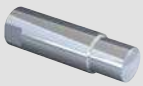	- 40 °C – + 70 °C	–	–	Ø 0.7 mm – 0.85 mm	~ 20	LL3-DA06	5326468
	- 40 °C – + 70 °C	–	–	Ø 0.5 mm – 0.8 mm	~ 14	LL3-DA07	5326469

→ **For dimensional drawings, please see page J-855**

J

Dimensional drawings

Dimensions in mm (inch)

Threaded sleeve

- **Detection principle:** Proximity system

LL3-DJ01

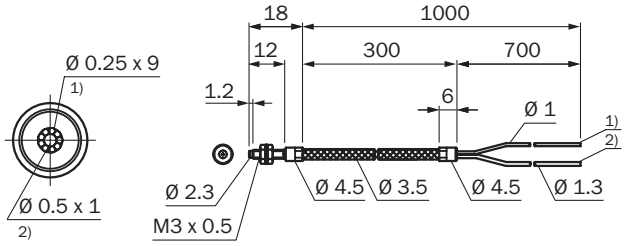

1) Receiver
2) Sender

LL3-DJ02

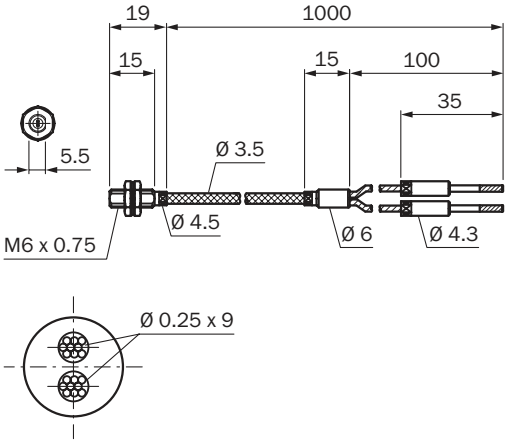

LL3-DR02

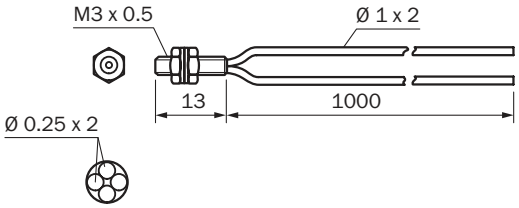

LL3-DR06

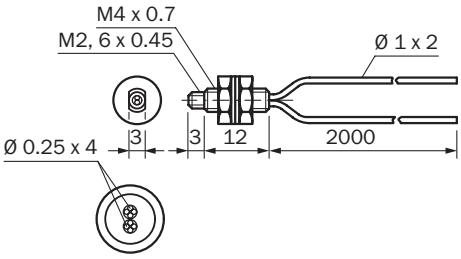

LL3-DS06

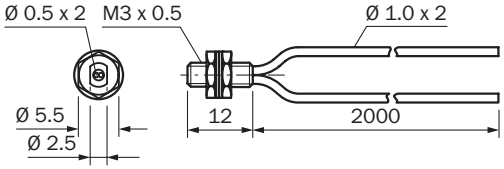

LL3-DT01

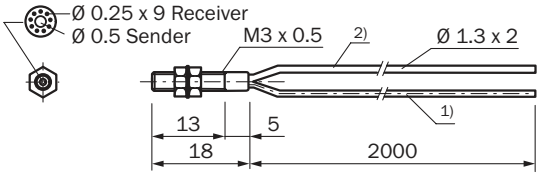

1) Sender
2) Receiver

LL3-DB01

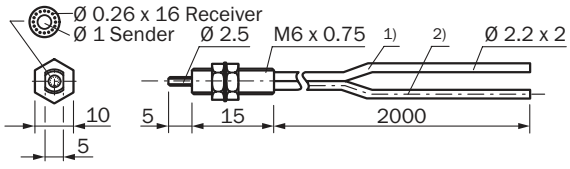

1) Receiver
2) Sender

LL3-DB03

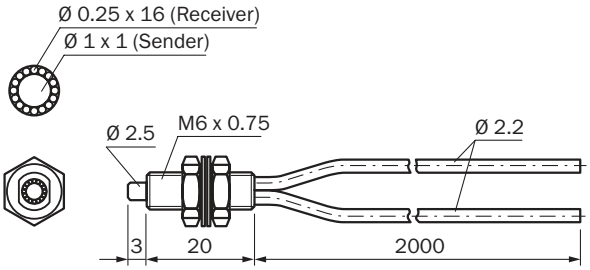

J

LL3-DB04

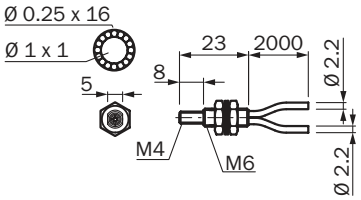

LL3-DK06

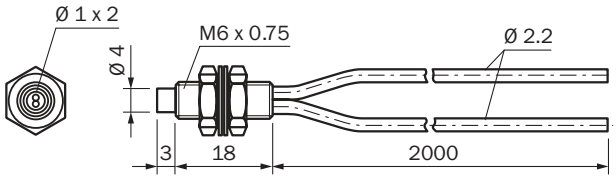

LL3-DK66

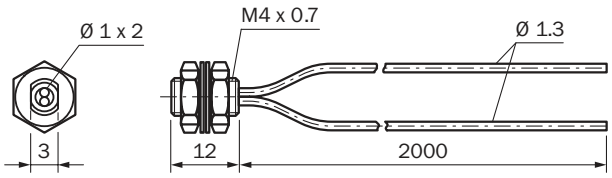

LL3-DK67

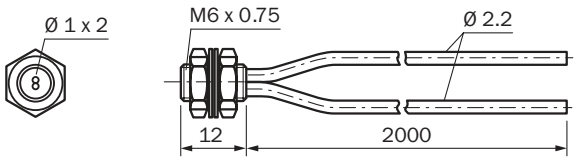

LL3-DR01

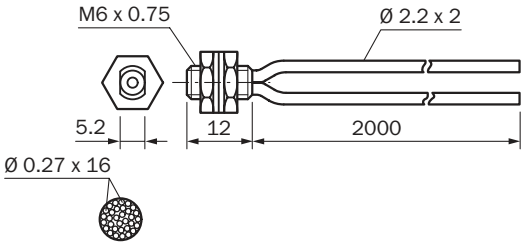

LL3-DR08

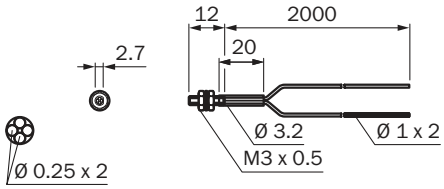

LL3-DK21

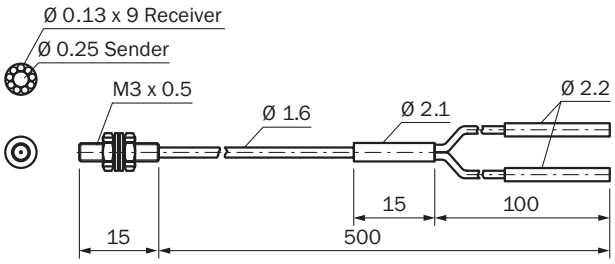

LL3-DM02

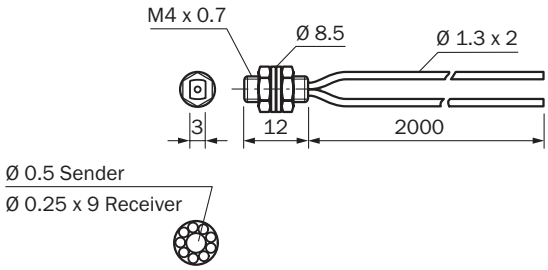

LL3-DB07

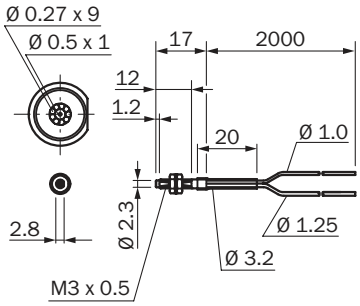

LL3-DM01

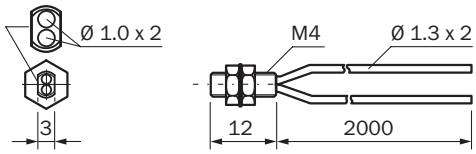

J

Smooth sleeve

- **Detection principle:** Proximity system

LL3-DR04

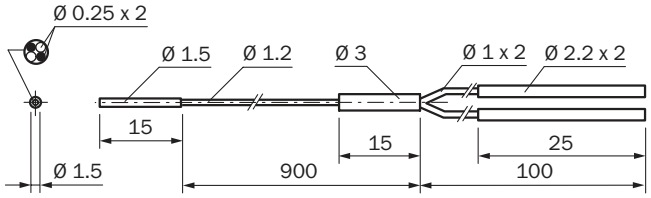

LL3-DP01

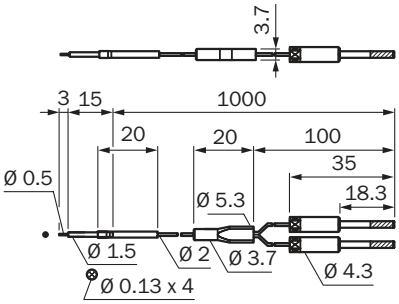

LL3-DK4Z

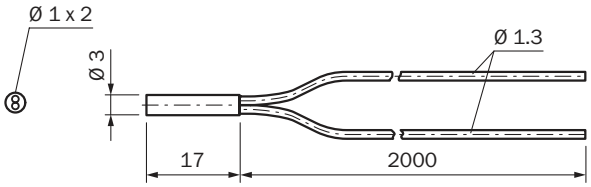

LL3-DR03

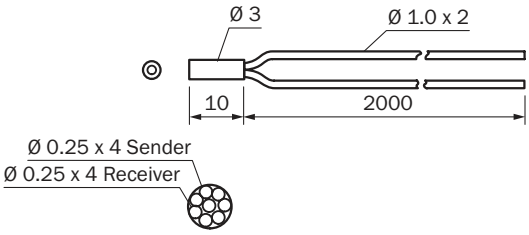

LL3-DT03

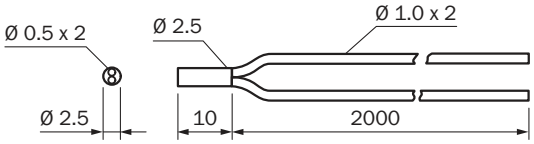

LL3-DK04

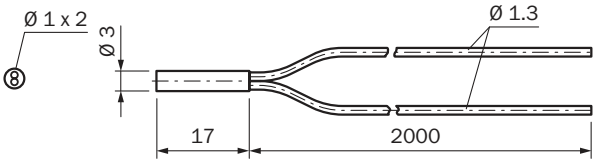

LL3-DR12

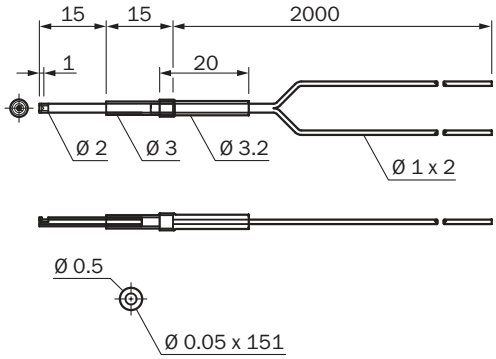

LL3-DR11

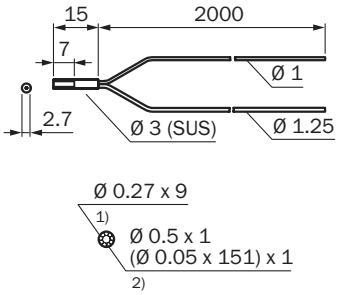

1) Receiver
2) Sender

LL3-DB10

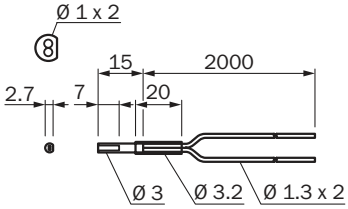

J

90° deflection

- **Detection principle:** Proximity system

LL3-DV05, LL3-DV06, LL3-DV07

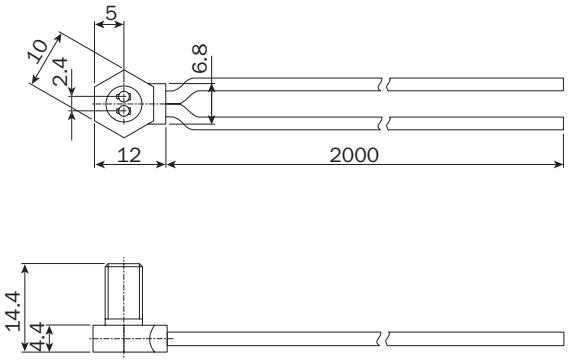

LL3-DB09

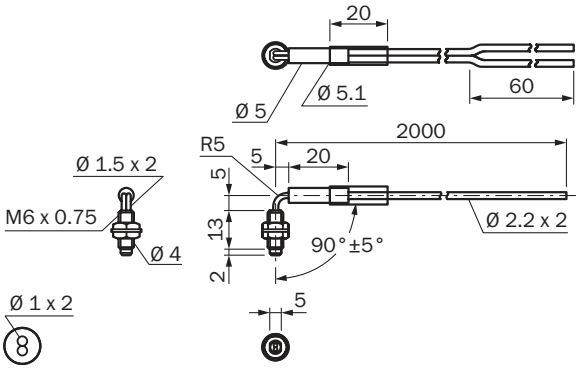

Flat type

- **Detection principle:** Proximity system

LL3-DE02

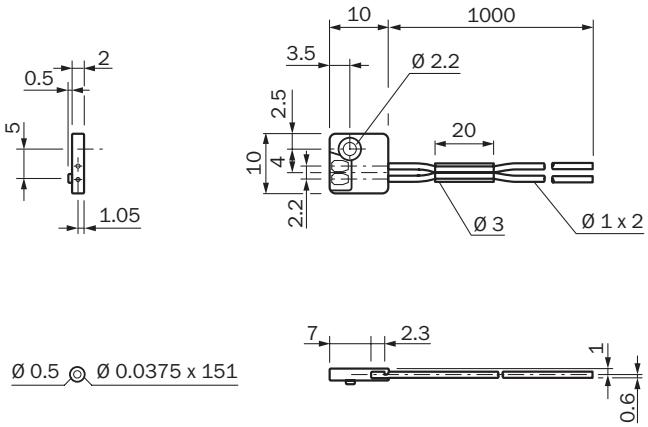

LL3-DE01

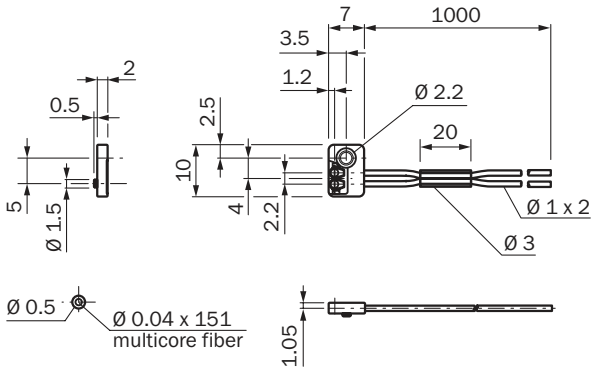

LL3-DC08

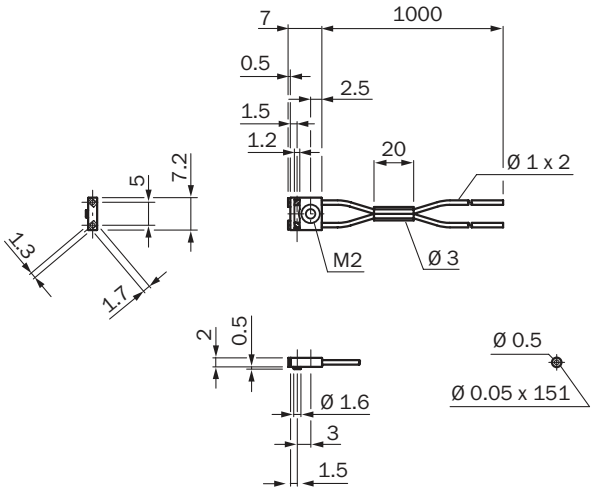

LL3-DC06

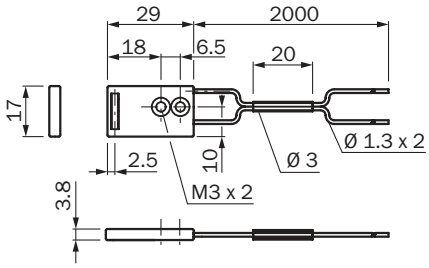

J

LL3-DC47

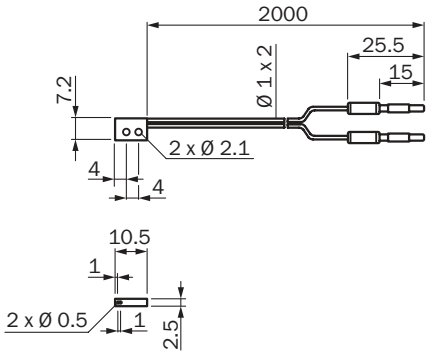

LL3-DC57

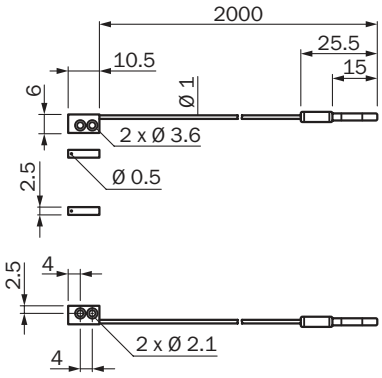

LL3-DC09

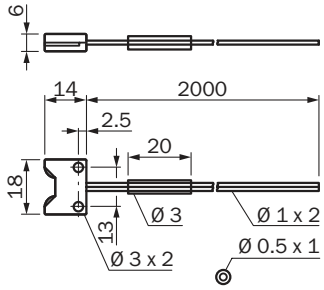

LL3-DH06

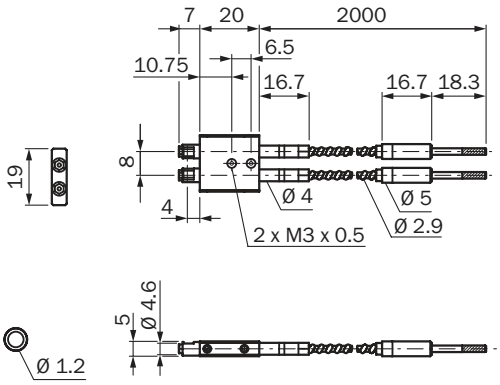

LL3-DH08

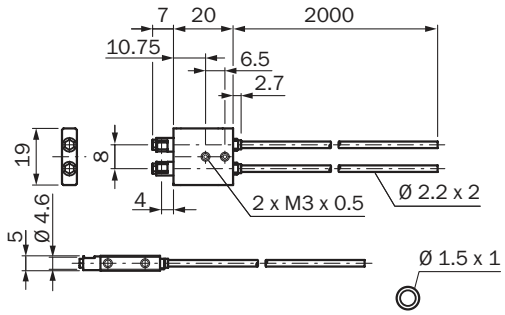

LL3-DE03

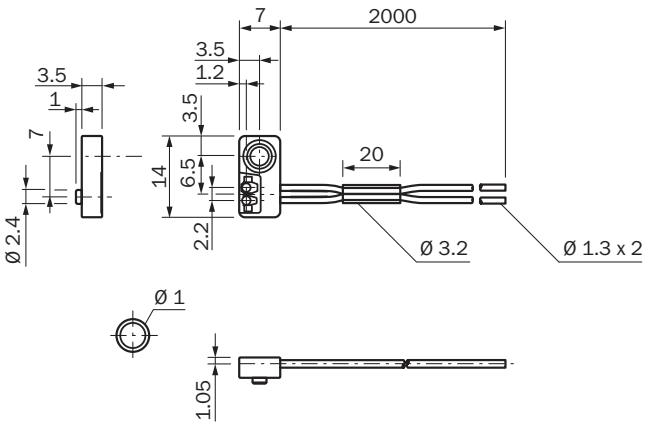

LL3-DE04

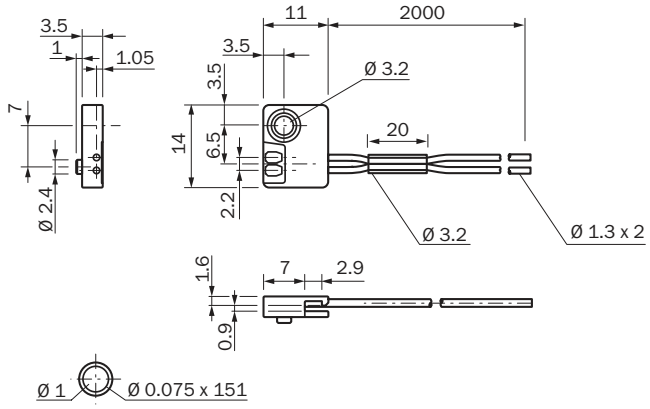

LL3-DR09

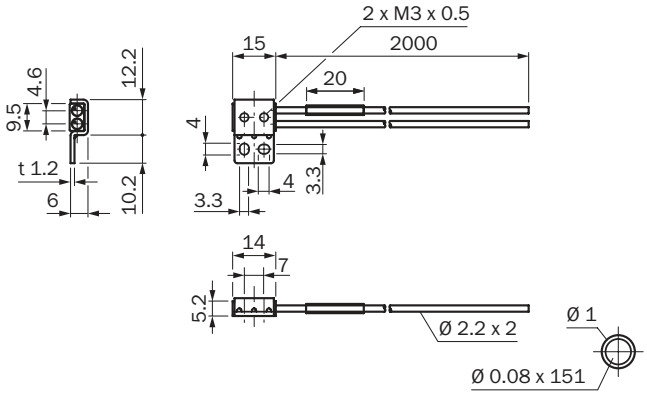

J

LL3-DC07

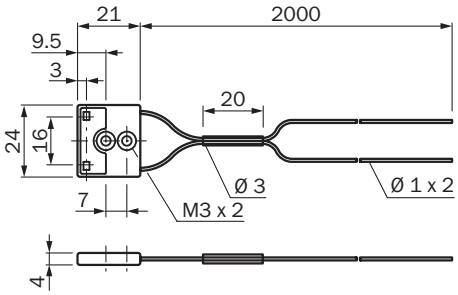

LL3-DC04

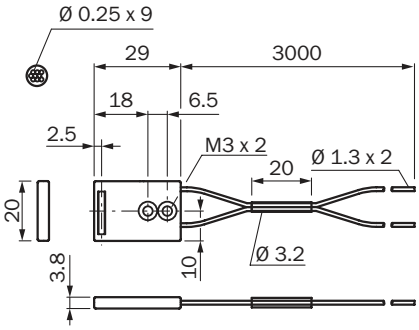

LL3-DH11

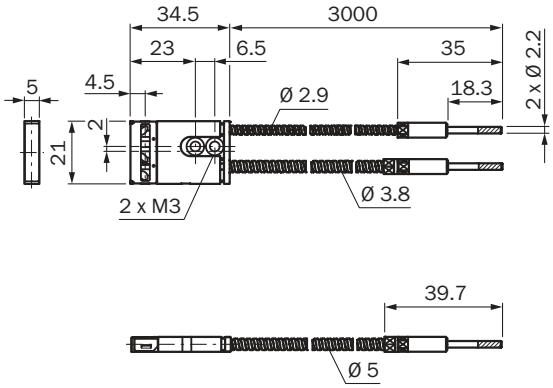

LL3-DH10

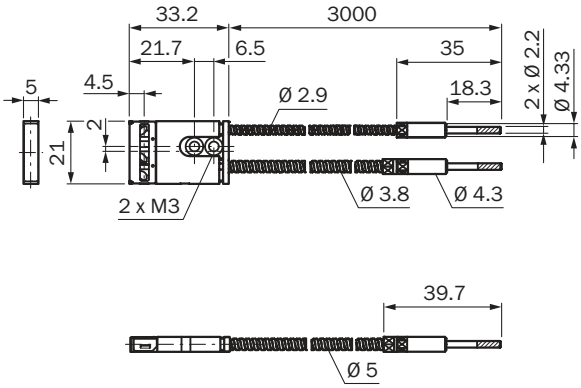

LL3-DC03

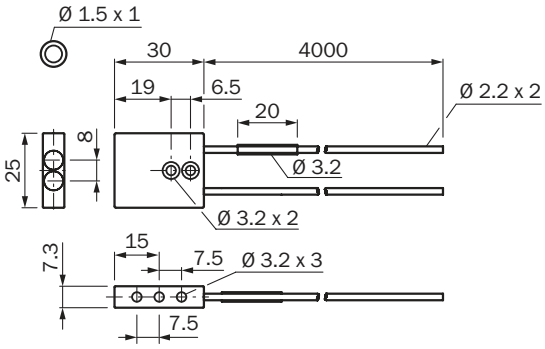

J

Long end sleeve

- **Detection principle:** Proximity system

LL3-DT02

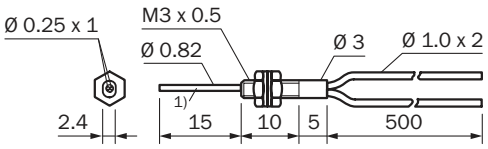

1) End tip cannot be bent

LL3-DT04

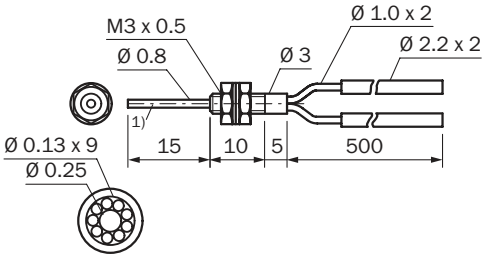

1) End tip cannot be bent

LL3-DR05

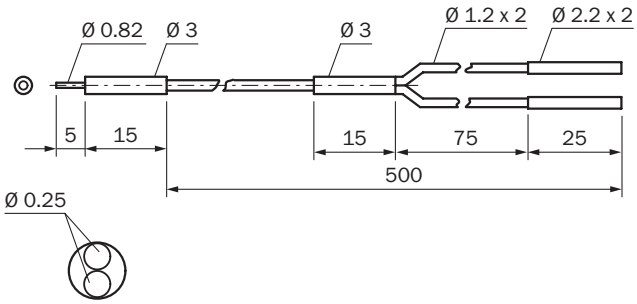

LL3-DR07

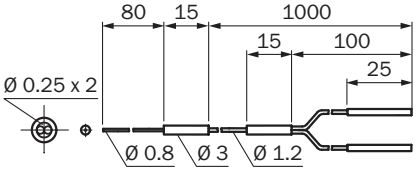

LL3-DB05

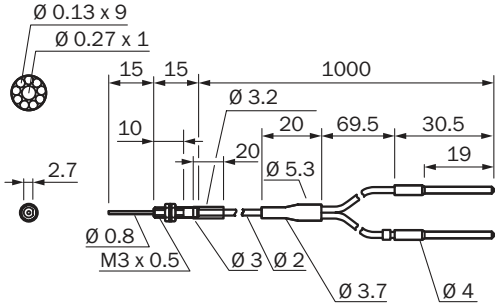

LL3-DH05

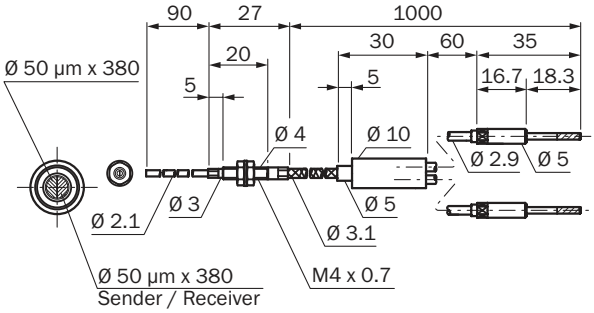

LL3-DK63Z

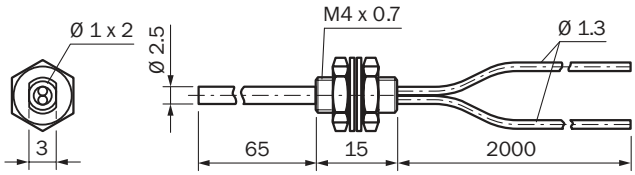

LL3-DK43

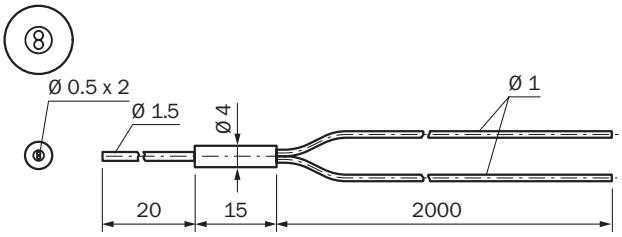

J

LL3-DM03

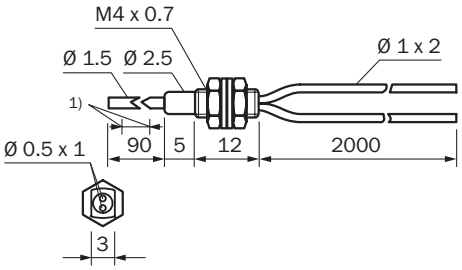

1) Flexible end tip, do not bend in this area (10 mm), bend radius R10 mm

LL3-DT05

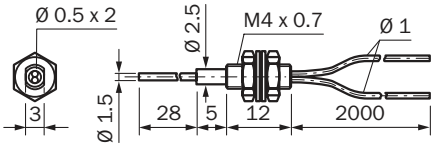

LL3-DV02

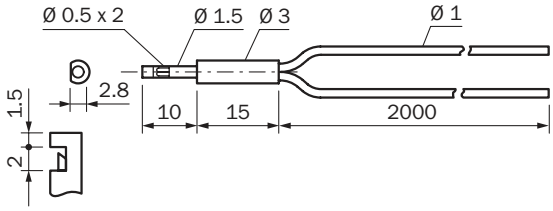

LL3-DB02

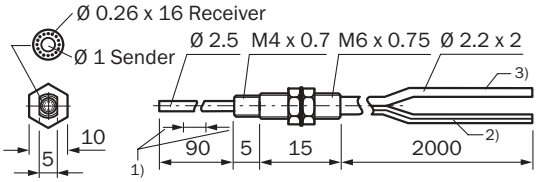

1) Flexible end tip, do not bend in this area (10 mm), bend radius R10 mm
2) Sender (marked blue)
3) Receiver

LL3-DR10

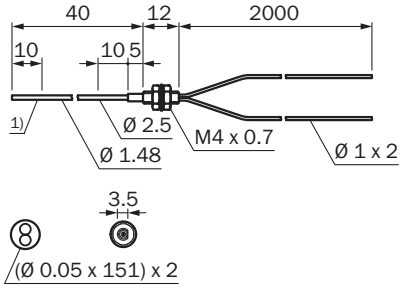

1) bendable

LL3-DB06

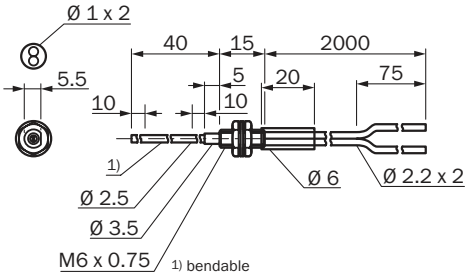

LL3-DB08

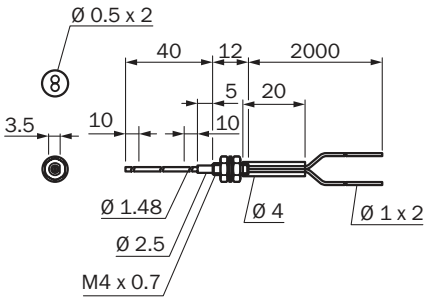

LL3-DH04

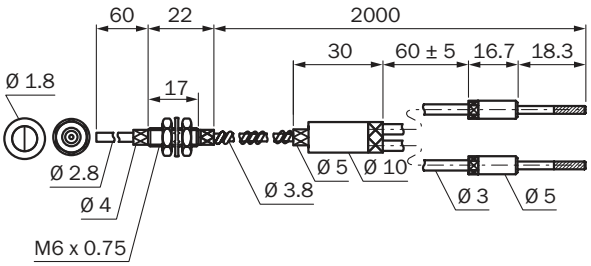

J

LL3-DK33

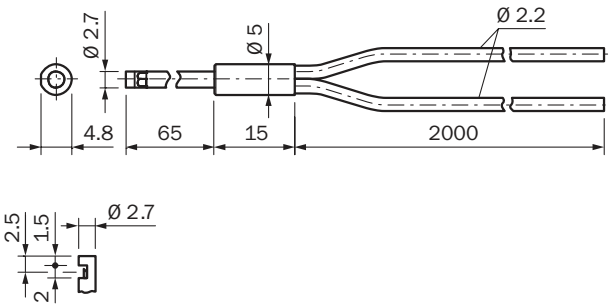

LL3-DV01

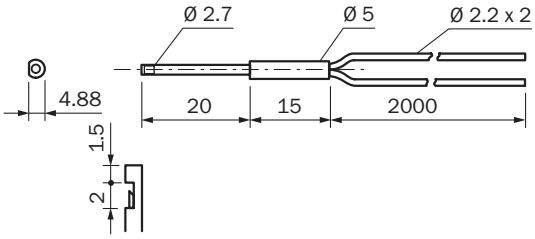

LL3-DV03

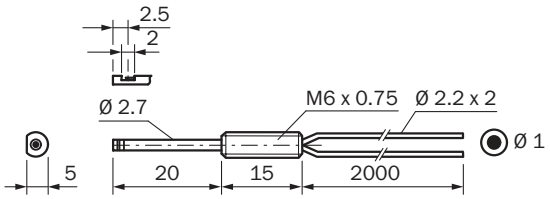

Area detection

- **Detection principle:** Proximity system

LL3-DZ01

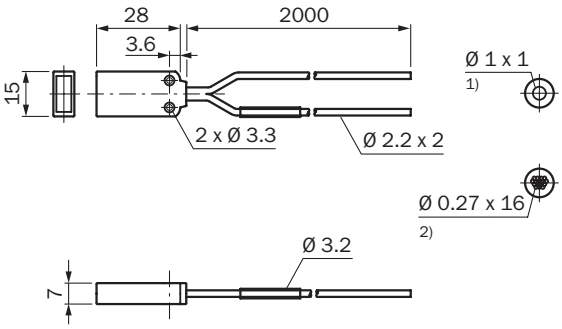

1) Sender
2) Receiver

All dimensions in mm

LL3-DZ02

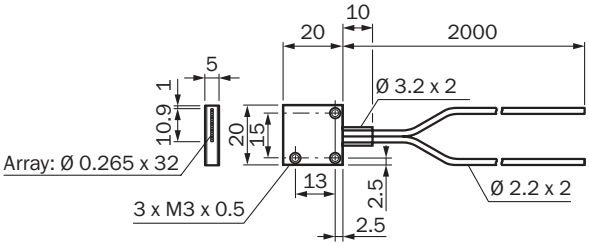

All dimensions in mm

LL3-DZ03

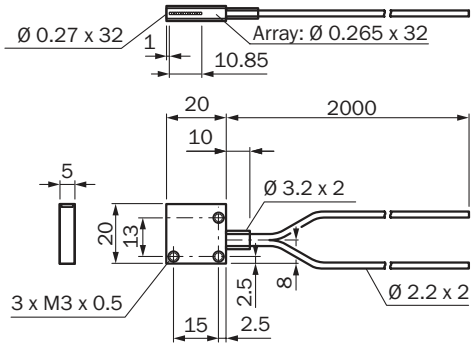

All dimensions in mm

J

Heat-resistant

- **Detection principle:** Proximity system

LL3-DH07

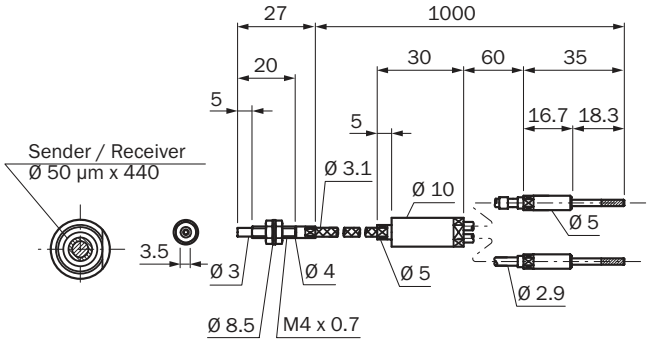

LL3-DW01

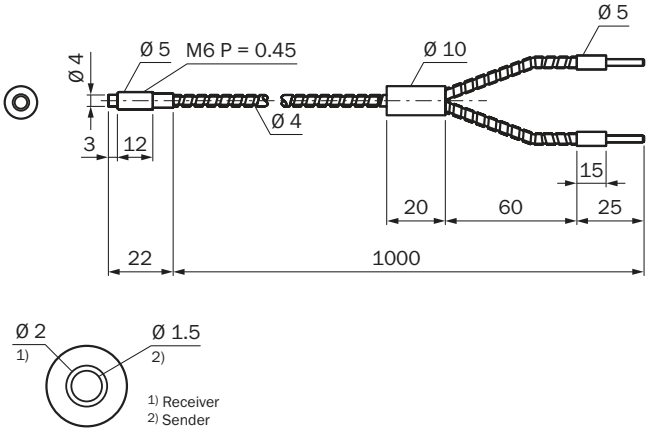

LL3-DH02

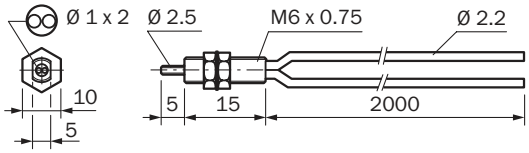

LL3-DH01

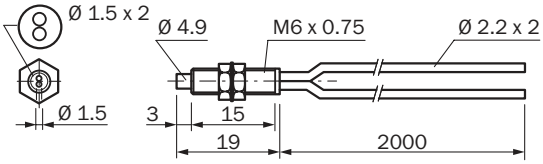

LL3-DH03

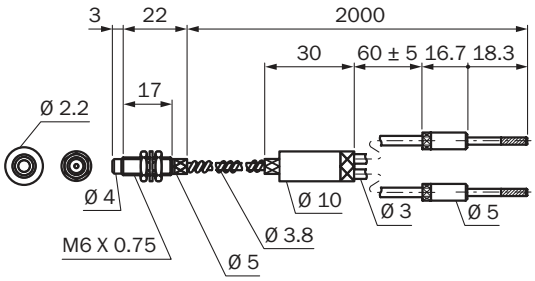

LL3-DH09

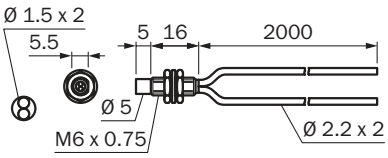

Resistant to oil/chemicals

- **Detection principle:** Proximity system

LL3-DY01

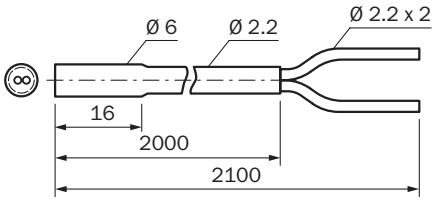

J

LCDs/transparent objects/semiconductors

- **Detection principle:** Proximity system

LL3-DC38

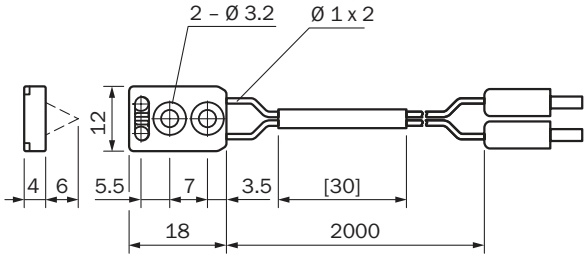

LL3-DC39

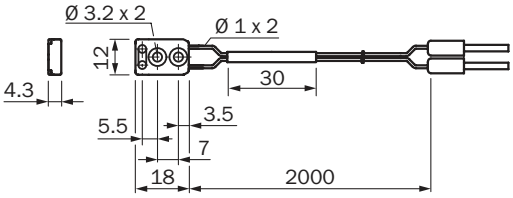

LL3-DC05

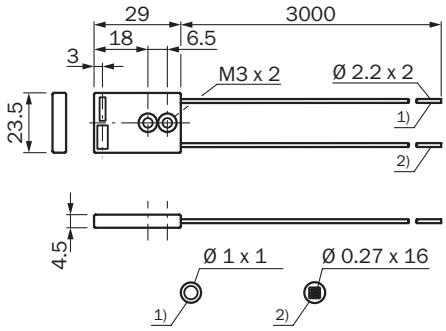

1) Sender
2) Receiver

Retro-reflective

- **Detection principle:** Proximity system

LL3-RB01

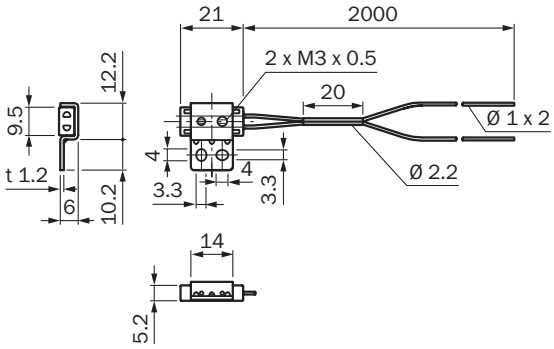

LL3-RB02

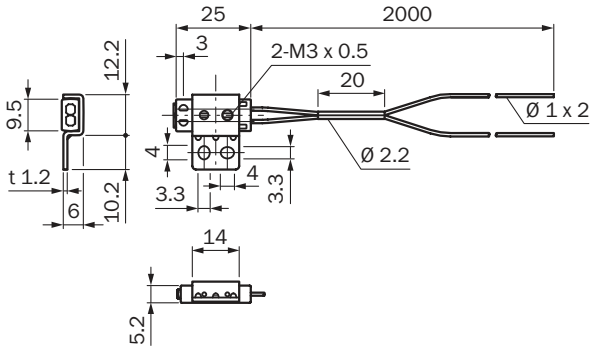

J

LL3-RG01

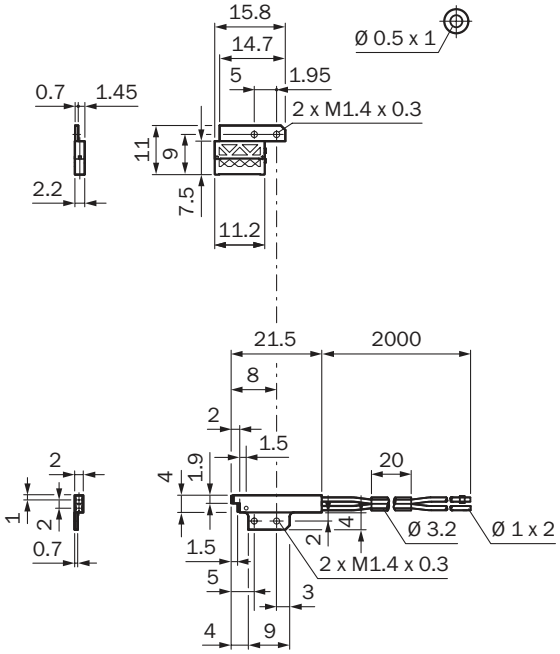

LL3-RR01

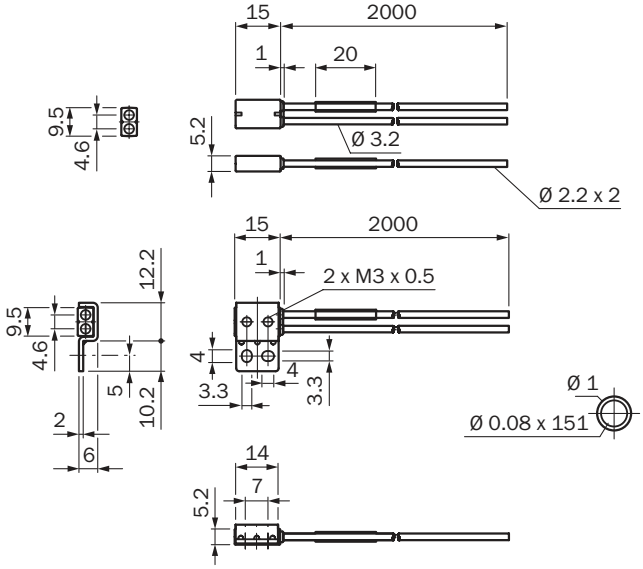

Liquid level

- **Detection principle:** Proximity system

LL3-DF04

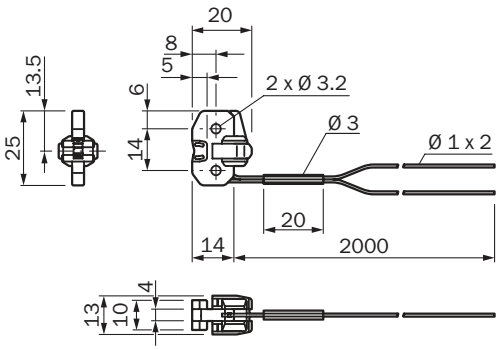

LL3-DF05

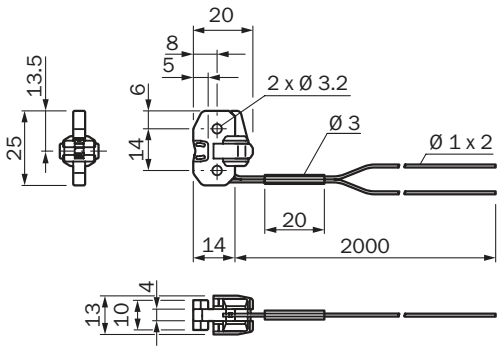

LL3-DF07

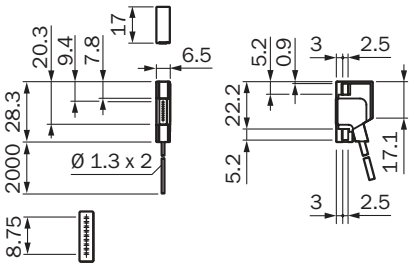

LL3-DF02-S01

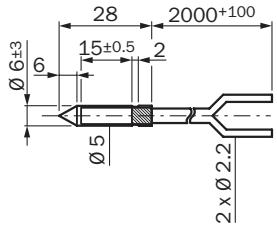

J

LL3-DW02

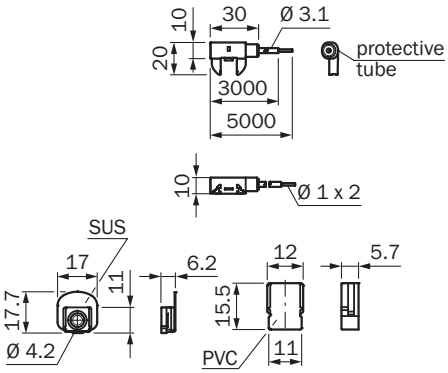

Threaded sleeve

- **Detection principle:** Through-beam system

LL3-TJ01

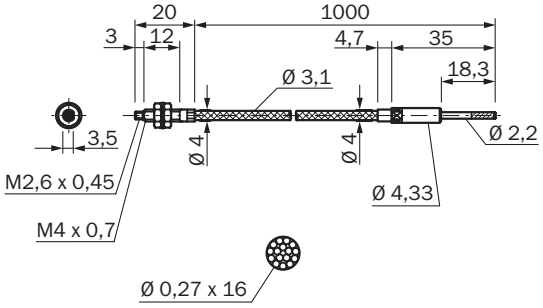

LL3-TR02

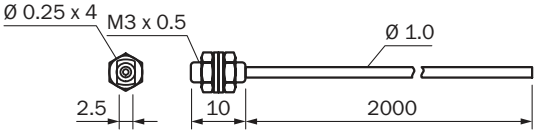

LL3-TM02

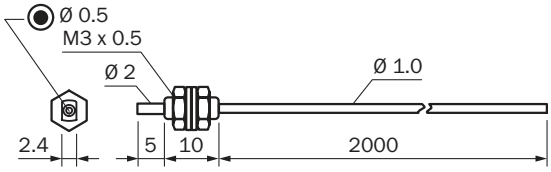

LL3-TK77

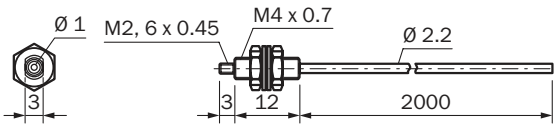

LL3-TB02

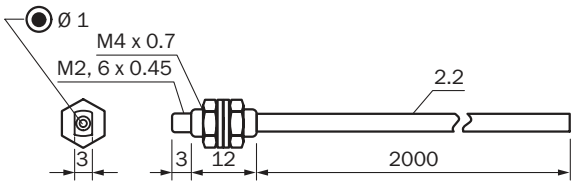

LL3-TM01

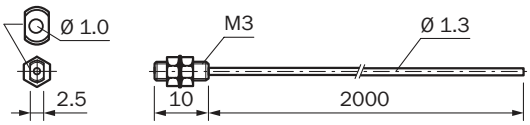

LL3-TR01

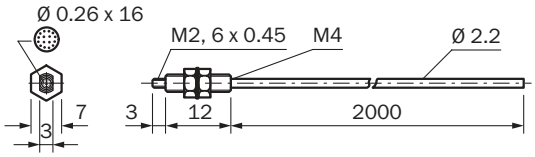

LL3-TB01

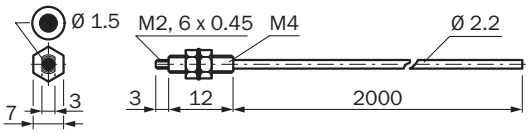

J

LL3-TB08

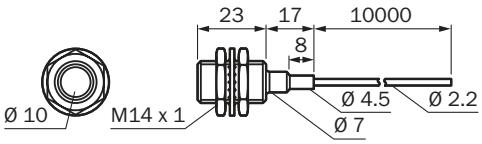

LL3-TX02

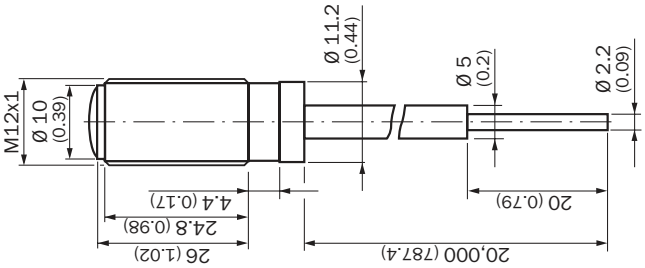

Smooth sleeve

- **Detection principle:** Through-beam system

LL3-TR04

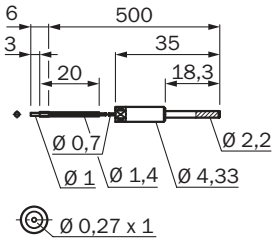

LL3-TR03

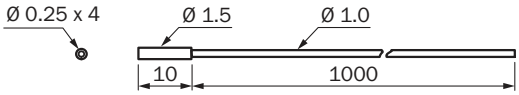

LL3-TH06

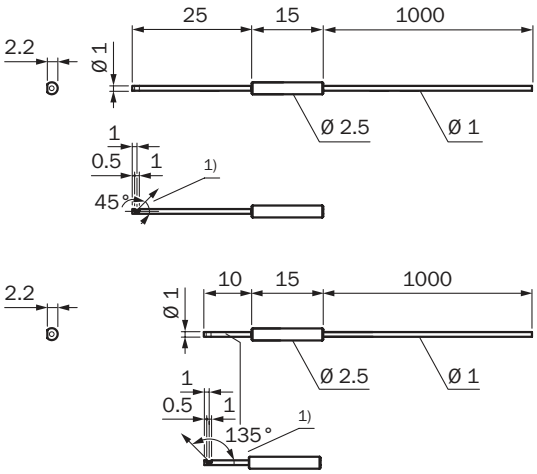

1) angle of beam

LL3-TG05

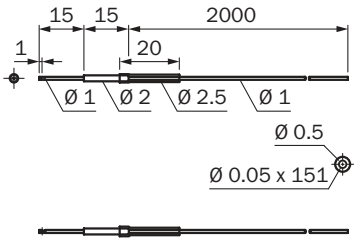

J

LL3-TR10

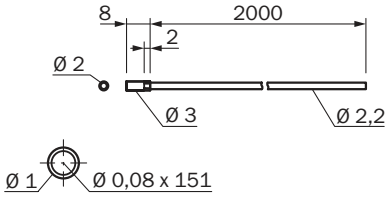

LL3-TB07

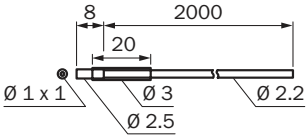

LL3-TG03, LL3-TV08

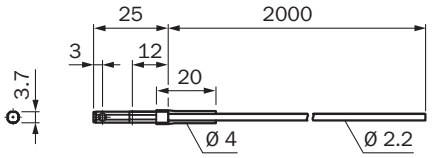

LL3-TM03

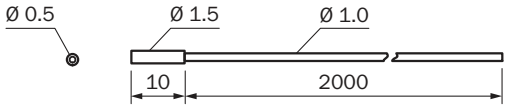

LL3-TK05

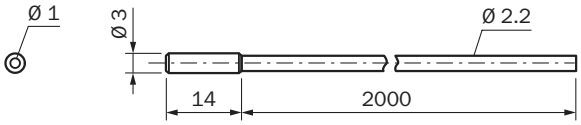

LL3-TS07

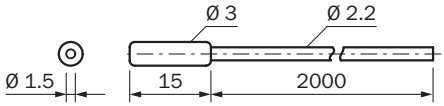

90° deflection

- **Detection principle:** Through-beam system

LL3-TR09

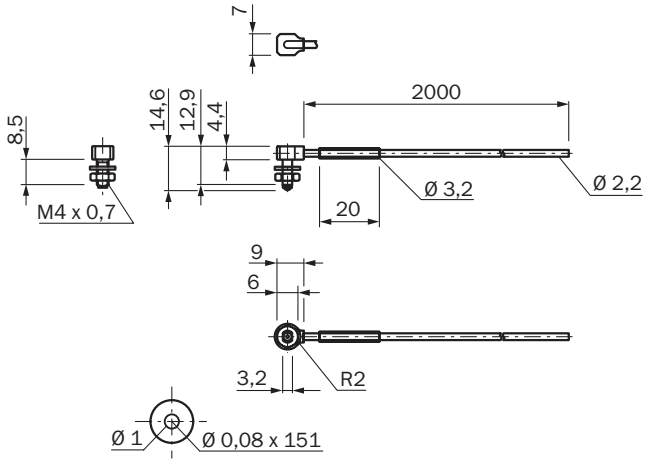

LL3-TB06

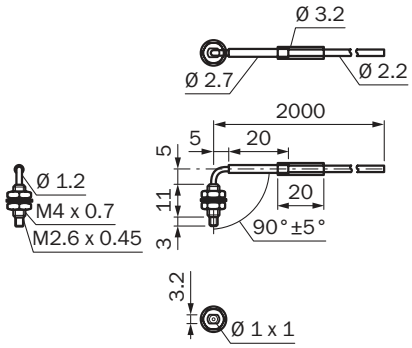

LL3-TR08

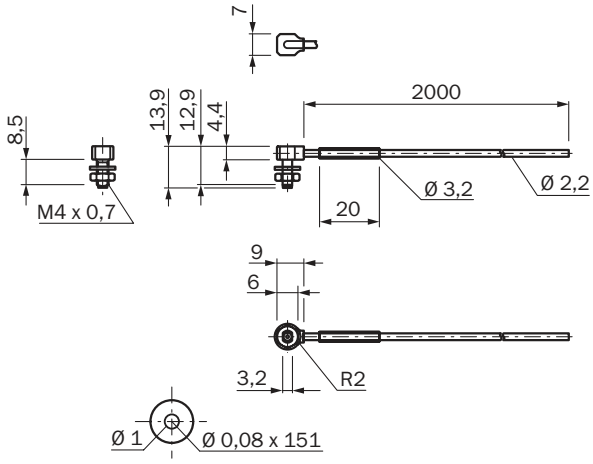

LL3-TH07

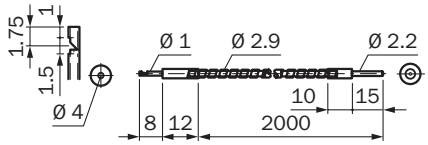

J

LL3-TH15

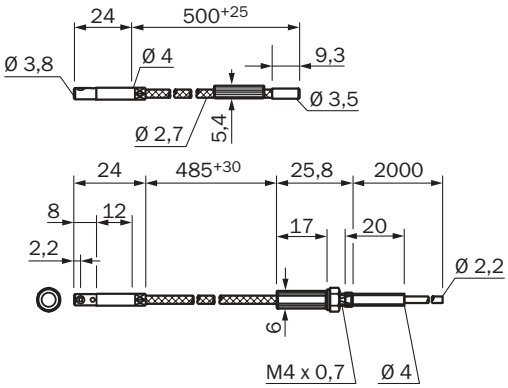

LL3-TH16

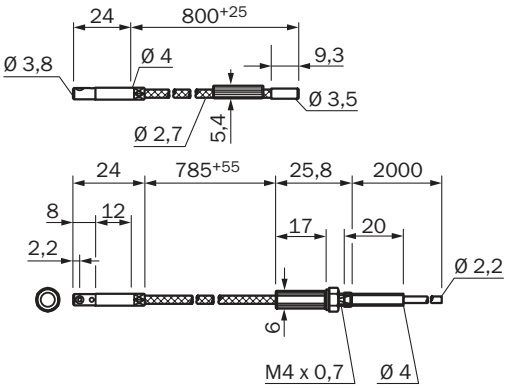

LL3-TV05

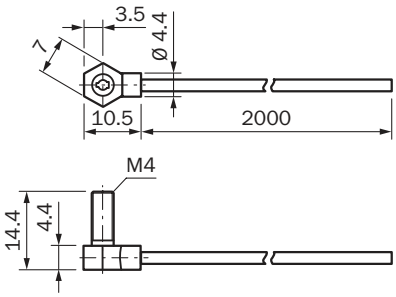

LL3-TV06, LL3-TV07

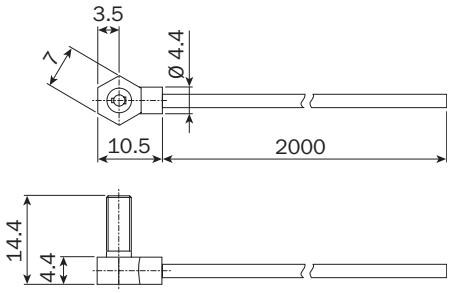

LL3-TY03

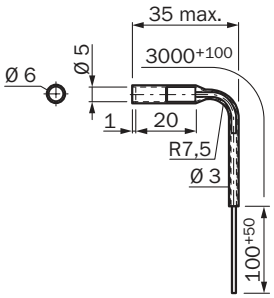

Flat type

- **Detection principle:** Through-beam system

LL3-TE01

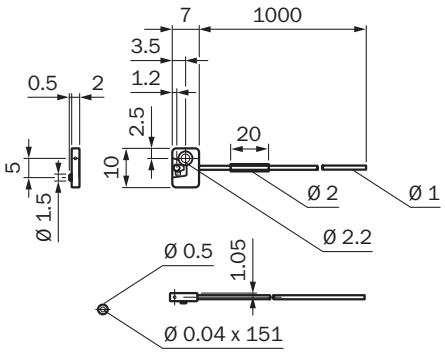

LL3-TE02

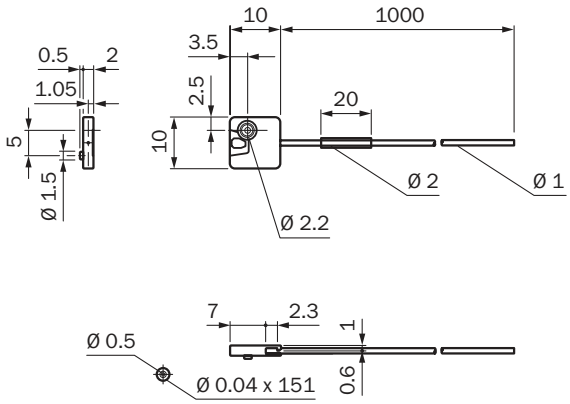

J

LL3-TE04

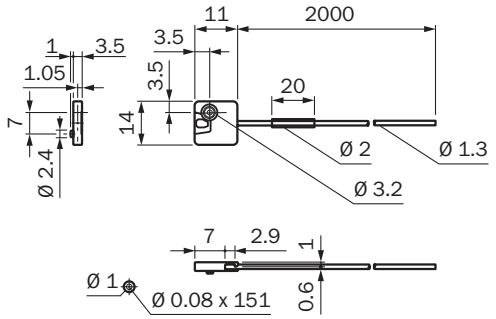

LL3-TE05

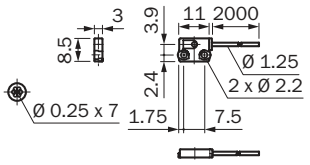

LL3-TR05

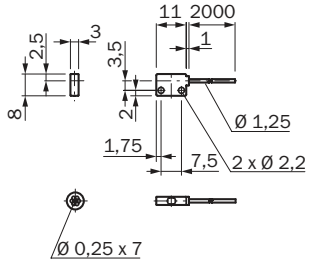

LL3-TR06

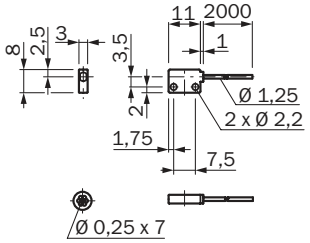

LL3-TR13

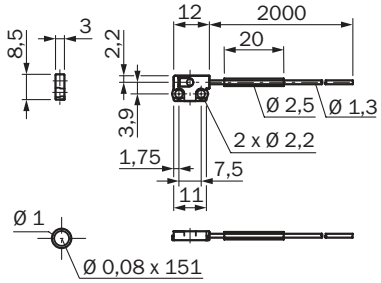

LL3-TR12

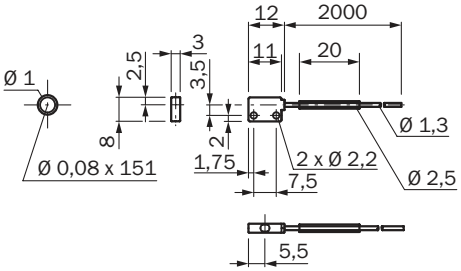

LL3-TR11

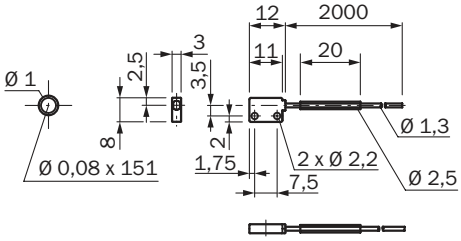

LL3-TE03

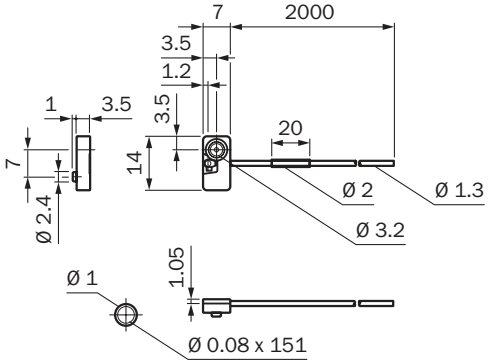

J

Long end sleeve

- **Detection principle:** Through-beam system

LL3-TP01

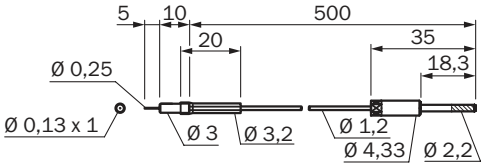

LL3-TB05

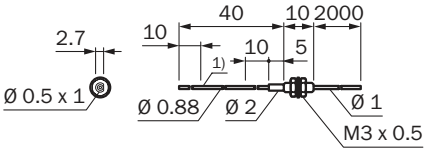

1) bendable

LL3-TT01

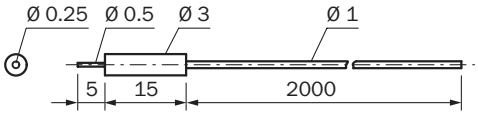

LL3-TV02

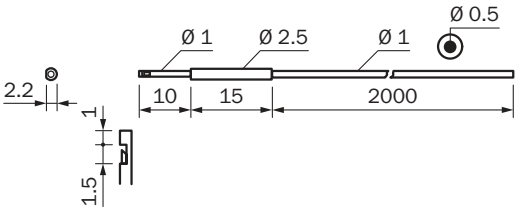

LL3-TV04

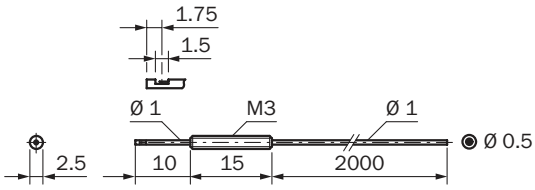

LL3-TB03

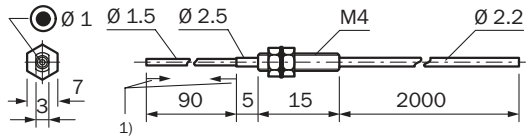

1) Flexible end tip, do not bend in this area (10 mm), bend radius R10 mm

LL3-TK16

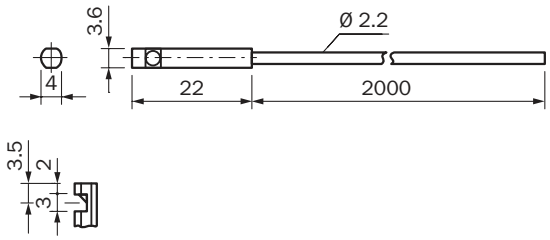

LL3-TS08

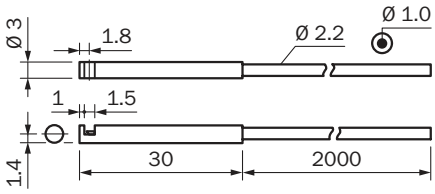

LL3-TV01

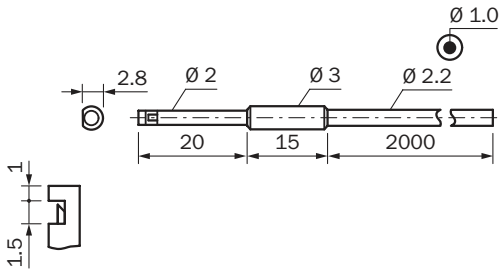

LL3-TS12

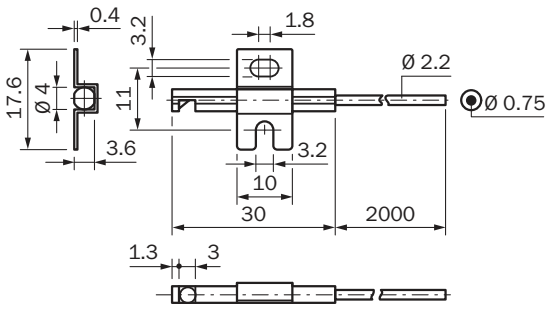

J

Area detection

- **Detection principle:** Through-beam system

LL3-TZ09

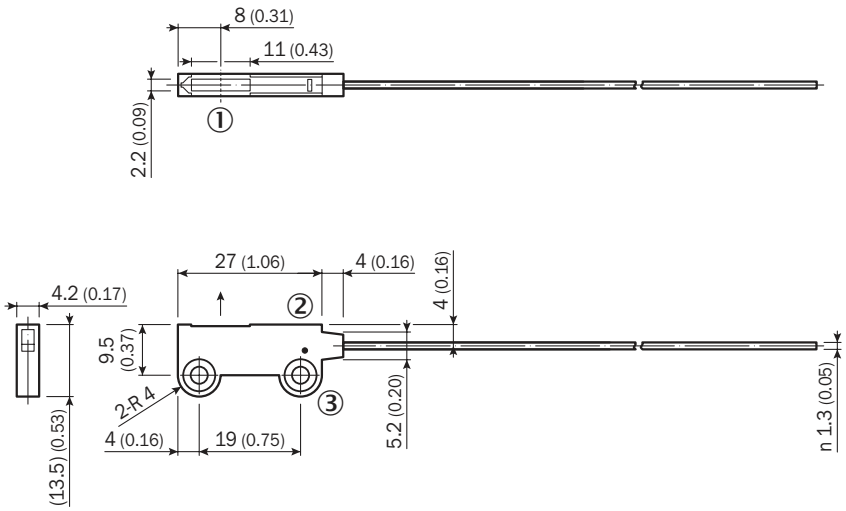

LL3-TZ10

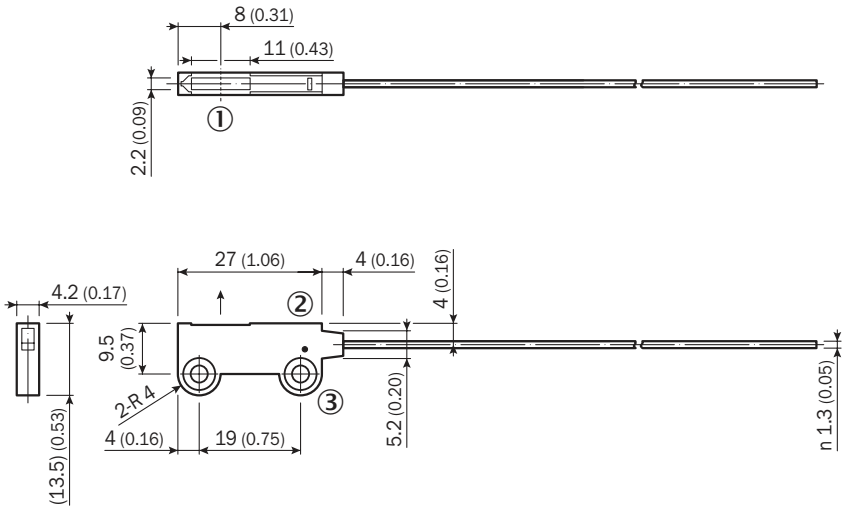

LL3-TS40

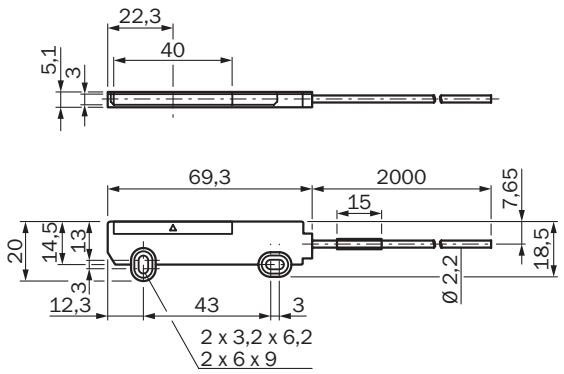

LL3-TZ05

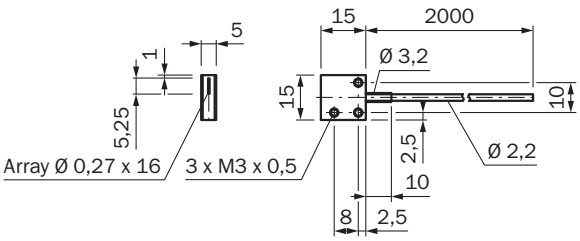

J

LL3-TZ06

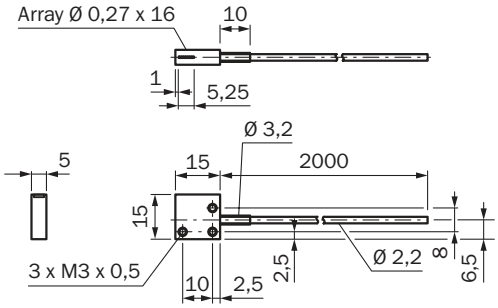

LL3-TS14

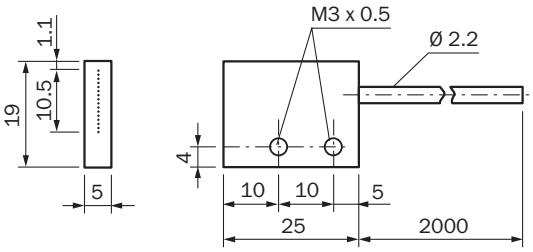

LL3-TS10

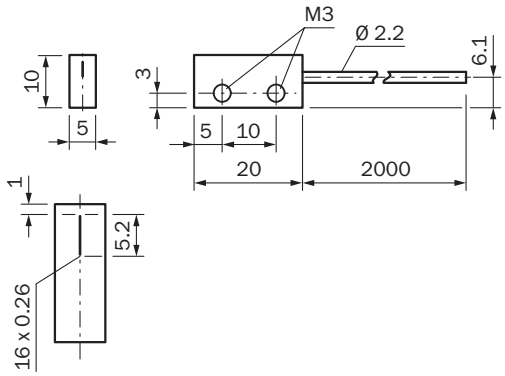

Heat-resistant

- **Detection principle:** Through-beam system

LL3-TH10

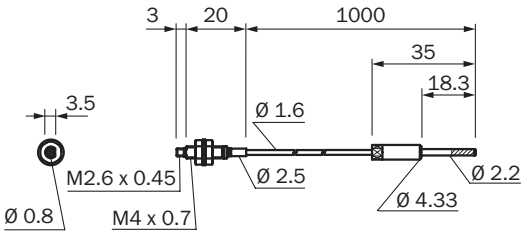

LL3-TH11

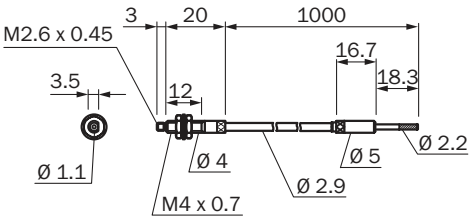

LL3-TW01

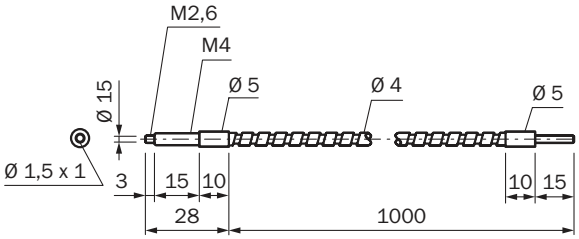

LL3-TH08

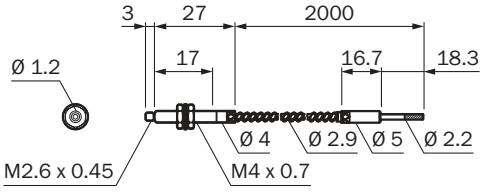

J

LL3-TH09

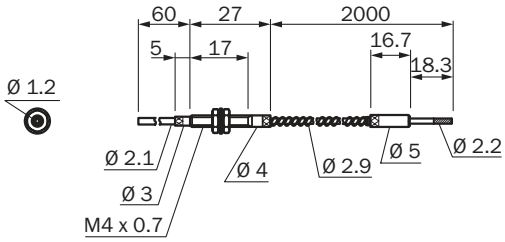

LL3-TH17

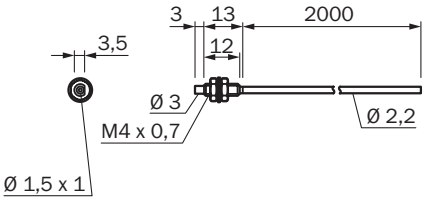

LL3-TH12

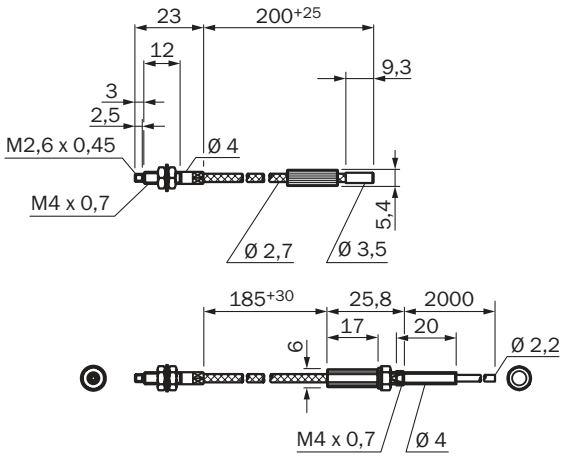

LL3-TH13

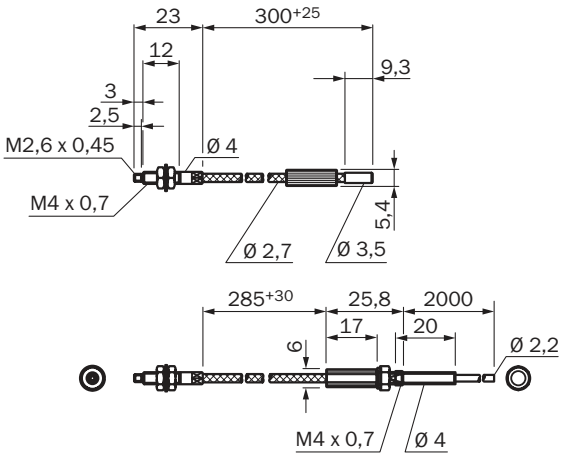

LL3-TH14

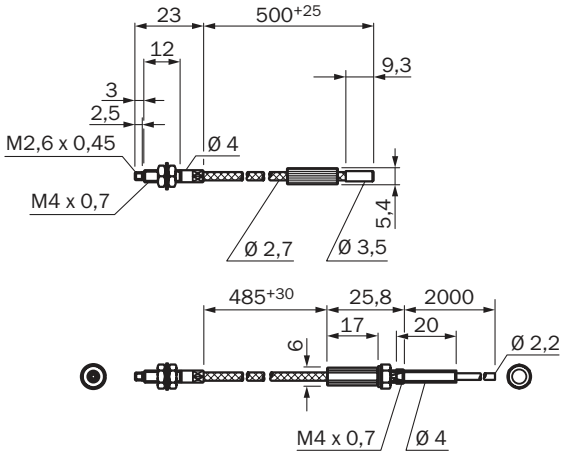

LL3-TH01

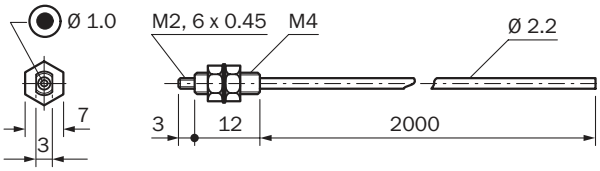

LL3-TH02

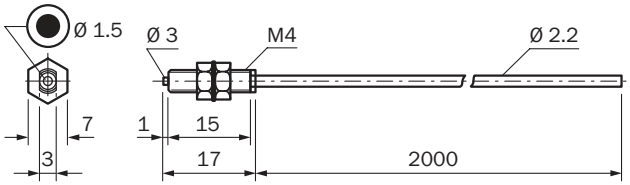

J

LCDs/transparent objects/semiconductors

- **Detection principle:** Through-beam system

LL3-TG04

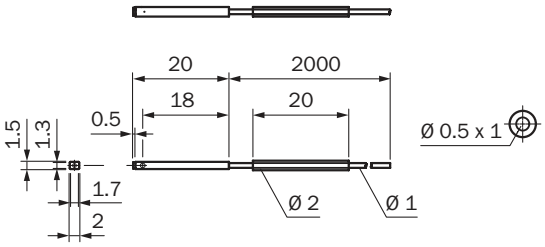

LL3-TS22M

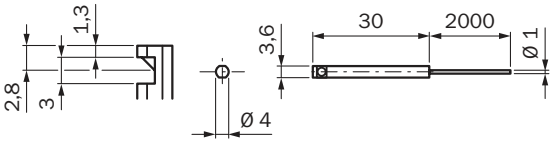

LL3-TS22

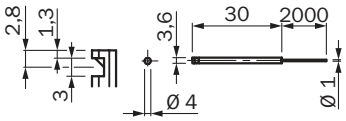

LL3-TG02

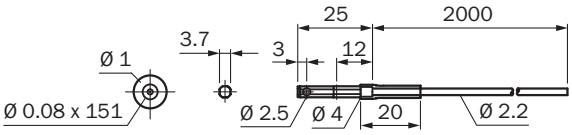

LL3-TG01

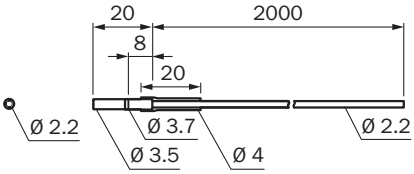

LL3-TG03

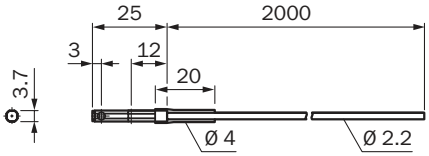

Resistant to oil/chemicals

- **Detection principle:** Through-beam system

LL3-TY01

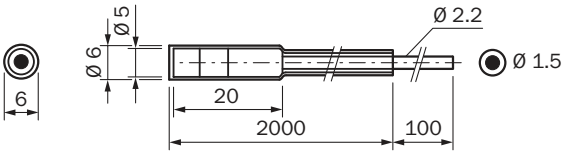

LL3-TY02

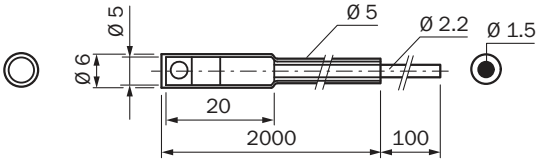

LL3-TY05

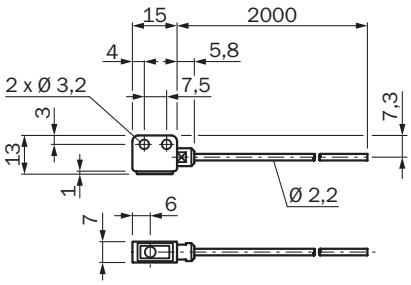

LL3-TY04

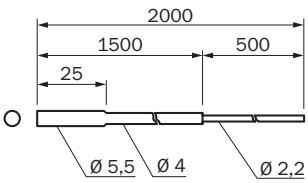

J

Liquid level

- **Detection principle:** Through-beam system

LL3-TF01

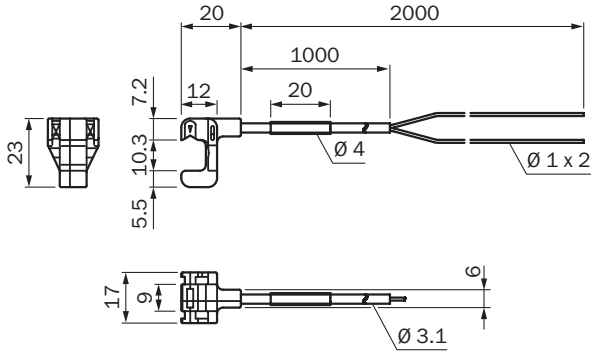

Tip adapters

- **Detection principle:** Proximity system

LL3-DA01

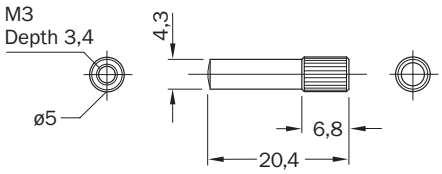

LL3-DA02

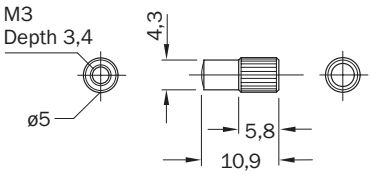

- **Detection principle:** Through-beam system

LL3-TA01

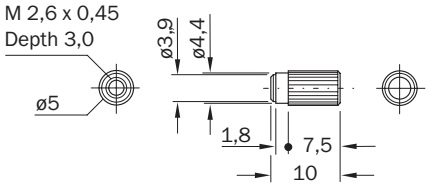

LL3-TA02

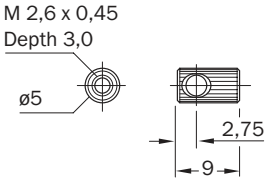

Recommended accessories

Others

Figure	Description	Model name	Part no.
	Cutter for fibers, supplied with LL3	FC	5304141

→ **For additional accessories, please see page L-861**

J