Switch Mode Power Supply (240/480/960-W Models)

S8VK-W

New Three-phase Input Power Supplies harmonized with Value design for Panel concept.
Saves space and contributes to reducing the wiring time.

With a line-up that includes two model types, 200 to 240 V input and 380 to 480 V input. Suitable for international use in a wide range of regions.

Supports quick identification of error locations with three status monitoring LEDs.

Enables stable operation of devices with the power boost function.

NEW

For the most recent information on models that have been certified for safety standards, refer to your OMRON website.

- Can operate at an ambient temperature of -40 to +70°C ✻1
- Side-by-side Mounting enabled ✻1 ✻2
- Complies with SEMI F47-0706 standard ✻3
- Certification for 3,000 m altitude ✻3
- Coated PCBs for Better Resistance to Environment
- Equipped with signal output that indicates DC OK and the overload status

✻1. For details, refer to *Derating Curves* on page 9 and 20.
✻2. Refer to the Front, Side-by-side mounting on page 24.
✻3. For details, refer to *Standard Compliance* on page 4 and 15.

⚠ Refer to *Safety Precautions* on page 24.

S8VK-W Series

S8VK-WA Three-phase 200V Input ..... **from page 2**
S8VK-WB Three-phase 400V input ..... **from page 11**

Common items

Common Accessories (order seperately) ..... **from page 22**
Common Precautions ..... **from page 24**

Switch Mode Power Supply (240/480/960-W Models)

S8VK-WA

New 200 V Three-phase Input Power Supplies
A solution to three-phase balance problems

- Can operate at an ambient temperature of -40 to +70°C ✻1
- Side-by-side Mounting enabled ✻1 ✻2
- Complies with SEMI F47-0706 standard ✻3
- Certification for 3,000 m altitude ✻3
- Coated PCBs for Better Resistance to Environment
- Equipped with signal output that indicates DC OK and the overload status

⚠ Refer to *Safety Precautions* on page 24.

✻1. For details, refer to *Derating Curves* on page 9.
✻2. Refer to the Front, Side-by-side mounting on page 24.
✻3. For details, refer to *Standard Compliance* on page 4.

Lineup

Output voltage	Power rating		
	240 W	480 W	960 W
24 V	Released	Released	Released

Model Number Structure

Model Number Legend
Not all combinations are possible. Refer to List of Models in Ordering Information, below.

S8VK-WA □□□ □□
Series name (1) (2) (3)

(1) Rated input voltage

Code	Rated input voltage
A	200 to 240 VAC

(2) Power rating

Code	Power rating
240	240 W
480	480 W
960	960 W

(3) Output voltage

Code	Output voltage (VDC)
24	24 V

Ordering Information

List of Models

Power rating	Rated input voltage	Rated output voltage (VDC)	Rated output current	Maximum boost current	Model
240 W	Three-phase / single-phase 200 to 240 VAC (Allowable range: Three-phase / single-phase 170 to 264 VAC, 240 to 350 VDC)	24 V	10 A	15 A	**S8VK-WA24024**
480 W		24 V	20 A	30 A	**S8VK-WA48024**
960 W		24 V	40 A	60 A	**S8VK-WA96024**

Accessories (Order separately)

Refer to page 22 for S8VK-WA/S8VK-WB Common Accessories.

Ratings, Characteristics, and Functions

Item		Power rating / Output voltage (VDC)	240 W / 24 V	480 W / 24 V	960 W / 24 V
Efficiency ✻1		Three-phase 200 VAC input	93% typ.	94% typ.	95% typ.
		Single-phase 200 VAC input	92% typ.	93% typ.	94% typ.
		Three-phase 230 VAC input	93% typ.	94% typ.	95% typ.
		Single-phase 230 VAC input	93% typ.	94% typ.	95% typ.
Input conditions	Input voltage range ✻2		Three-phase/single-phase 170 to 264 VAC, 265 to 300 VAC (1 second) 240 to 350 VDC		
	Frequency ✻2		50/60 Hz (47 to 63 Hz)		
	Input current ✻1	Three-phase 200 VAC input	0.80 A typ.	1.6 A typ.	3.1 A typ.
		Single-phase 200 VAC input	1.4 A typ.	2.6 A typ.	5.2 A typ.
		Three-phase 230 VAC input	0.70 A typ.	1.4 A typ.	2.7 A typ.
		Single-phase 230 VAC input	1.2 A typ.	2.3 A typ.	4.5 A typ.
	Power factor ✻1		0.9 min.		
	Leakage current ✻3	Three-phase 200 VAC input	1 mA max.		
		Three-phase 230 VAC input	1 mA max.		
	Inrush current ✻4 (for a cold start at 25°C)	Three-phase 200 VAC input	13 A typ.	13 A typ.	14 A typ.
		Three-phase 230 VAC input	15 A typ.	15 A typ.	16 A typ.
Output characteristics	Rated output current		10 A	20 A	40 A
	Power Boost Function		15 A	30 A	60 A
	Voltage adjustment range ✻5		24 to 29.5 V (with V.ADJ)		24 to 28 V (with V.ADJ)
	Ripple noise voltage ✻6	Three-phase 200 to 240 VAC input	50 mVp-p max. at 20 MHz of bandwidth	120 mVp-p max. at 20 MHz of bandwidth	60 mVp-p max. at 20 MHz of bandwidth
	Input variation influence ✻7		0.5% max.		
	Load variation influence ✻8		1.5% max.		
	Temperature variation influence	200 to 240 VAC input	0.05%/°C max.		
	Startup time ✻9	Three-phase 200 VAC input	1,000 ms max.		
		Three-phase 230 VAC input	1,000 ms max.		
	Output hold time ✻9	Three-phase 200 VAC input	35 ms typ.	30 ms typ.	25 ms typ.
		Three-phase 230 VAC input	35 ms typ.	30 ms typ.	25 ms typ.
Additional functions	Overload protection		Yes, automatic reset, intermittent operation type Refer to *Overload Protection* on page 5.		
	Overvoltage protection		Yes, 130% or higher of rated output voltage, power shut off (shut off the input voltage and turn on the input again), Refer to *Overvoltage Protection* on page 5.		
	Series operation		Yes (For up to two Power Supplies; external diodes required.)		
	Parallel operation		Yes (For up to two Power Supplies), Refer to *Parallel Operation* on page 28.		
	INPUT OK Indicator		Yes (LED: Green)		
	DC OK Indicator		Yes (LED: Green)		
	Iout > 100% Indicator		Yes (LED: Yellow)		
	DC OK Signal Output		Yes (MOS FET relay output 30 VDC max., 50 mA max.)		
	Iout > 100% signal output		Yes (MOS FET relay output 30 VDC max., 50 mA max.)		
Insulation	Withstand voltage		3.0 kVAC for 1 min. (between all input terminals and all output terminals, signal output terminals), cutoff current 20 mA		
			2.0 kVAC for 1 min. (between all input terminals and PE terminals), cutoff current 20 mA		
			1.0 kVAC for 1 min. (between all output terminals, signal output terminals and PE terminals), cutoff current 25 mA		
			0.5 kVAC for 1 min. (between all output terminals and all signal output terminals), cutoff current 10 mA		
	Insulation resistance		100 MΩ min. (between all output terminals, signal output terminals and all input terminals / PE terminals) at 500 VDC		
Environment	Ambient operating temperature *10		-40 to 70°C (Derating is required according to the temperature. Refer to *Engineering Data* on page 9.) (with no condensation or icing)		
	Storage temperature		-40 to 85°C (with no condensation or icing)		
	Ambient operating humidity		95% max. (Storage humidity: 95% max.)		
	Vibration resistance		10 to 55 Hz, maximum 5 G, 0.42 mm single amplitude for 2 h each in X, Y, and Z directions		
	Shock resistance		294 m/s^2, 3 times each in ±X, ±Y, ±Z directions		
Reliability	MTBF ✻11		290,000 hrs typ.	230,000 hrs typ.	170,000 hrs typ.
	Expected life ✻12		10 years min.		
Construction	Weight		800 g max.	1,050 g max.	1,750 g max.
	Cooling fan		No		
	Degree of protection		IP20 by EN/IEC 60529		

Note: For ✻1 to ✻12, refer to page 4.

Item			Power rating / Output voltage (VDC)	240 W / 24 V	480 W / 24 V	960 W / 24 V
Standards	Harmonic current emissions			Conforms to EN 61000-3-2 (single-phase ✻13) Complies with JIS C 61000-3-2 (three-phase, single-phase)		
	EMI	Conducted emissions		Conforms to EN 61204-3 Class B, EN 55011 Class B (three-phase) Conforms to EN 61204-3 Class A, EN 55011 Class A (single-phase)		Conforms to EN 61204-3 Class B, EN 55011 Class B (three-phase) Conforms to EN 61204-3 Class B, EN 55011 Class B (single-phase ✻14) Conforms to EN 61204-3 Class A, EN 55011 Class A (single-phase)
		Radiated emissions				
	EMS			Conforms to EN 61204-3 high severity levels		
	Safety standards			UL 508 (Listing) CSA C22.2 No.107.1 (cUL) UL 62368-1 (Recognition) OVC II (≤ 3000 m) Pol2 CSA C22.2 No.62368-1 (cUR) OVC II (≤ 3000 m) Pol2 EN/IEC 62477-1 OVC III (≤ 2000 m) OVC II (2000 m < and ≤ 3000 m) Pol2 EN/IEC 62368-1 OVC II (≤ 3000 m) Pol2 EAC (TR CU 004 / 2011, TR CU 020 / 2011) RCM (EN61000-6-4) Complies with PELV (EN/IEC 60204-1) Complies with EN/IEC 61558-2-16		
	SEMI			Complies with SEMI F47-0706 (three-phase / single-phase 200 to 240 VAC input)		

✻1. The value is when both rated output voltage and rated output current are satisfied.
✻2. Do not use an inverter output for the product. Inverters with an output frequency of 50/60 Hz are available, but the rise in the internal temperature of the product may result in ignition or burning. If the input is connected to a UPS, do not connect a UPS with a square-wave output. Doing so will cause the internal temperature of the product to increase, possibly causing smoking or burning.
✻3. The value is determined according to the Electrical Appliances and Material Safety Act.
✻4. Values for a cold start at 25°C. Refer to *Inrush Current, Startup Time, and Output Hold Time* on page 5.
✻5. If the output voltage adjuster (V. ADJ) is turned, the voltage will increase by more than the voltage adjustment range.
When adjusting the output voltage, confirm the actual output voltage from the product and be sure that the load is not damaged.
✻6. The value is when both rated output voltage and rated output current are satisfied. A characteristic when the ambient operating temperature is 25°C.
✻7. This is the maximum variation in the output voltage when the input voltage is gradually changed within the allowable input voltage range at the rated output voltage and rated output current.
✻8. 200 to 240 VAC input, in the range of 0 A to the rated output current.
✻9. This is the value when both rated output voltage and rated output current are satisfied and at room temperature (25°C). Refer to *Inrush Current, Startup Time, and Output Hold Time* on page 5 for details.
✻10. At -40 to -25°C, time will be required before the rated output voltage is output after the input voltage is input.
✻11. MTBF is calculated according to JEITA RCR-9102.
✻12. Refer to *Recommended Replacement Periods and Periodic Replacement for Preventive Maintenance* on page 32 for details.
✻13. EN61000-3-2 does not applied to three-phase 200 to 240 VAC input models.
✻14. Class B compliance was met with the following configuration.

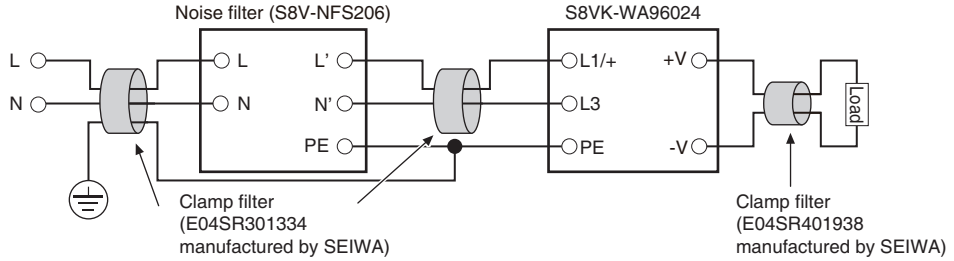

Standard Compliance

- To comply with PELV output requirements for EN/IEC 60204-1, ground the negative side of the output (-V) to a protective earth (PE).
- EN/IEC 61558-2-16
  The S8VK-WA was designed based on EN/IEC 61558-2-16.
  Currently, IEC 61558-2-17 has been replaced by IEC 61558-2-16.
  When certification was received for EN/IEC 60204-1 (Machinery Safety), it was necessary to go through a control transformer to the control circuits. However, a control transformer is not always necessary for product that have been certified for the safety standard for OVCIII or for product that use a transformer that complies with EN/IEC 61558-2-16.
- Safety Standards for a DC Input
  The following safety standards apply to a DC input: UL 62368-1, cUR (CSA C22.2 No. 62368-1), EN/IEC 62368-1, EN/IEC62477-1, EN/IEC 61558-2-16. Safety standard compliance is achievable by connecting a UL-certified fuse as specified below to the (L1/+) side.
  For a DC power input, connect (L1/+) side to (+), and (L3/-) side to (-).
  To select a UL certified fuse, refer to *Recommended circuit breakers and fuses* on page 25.

Inrush Current, Startup Time, and Output Hold Time

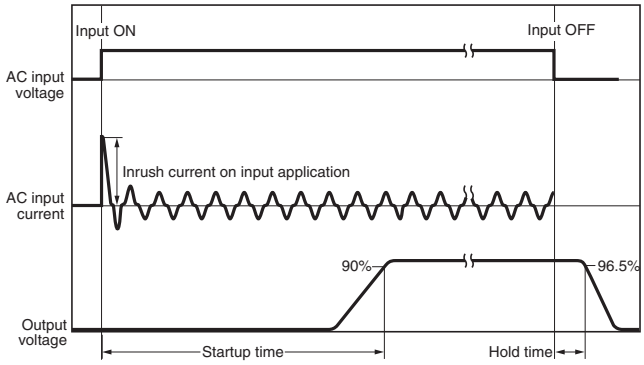

Note: Twice the normal inrush current will flow during parallel operation or for backup operation. Therefore, check the fusing characteristics of fuses and operating characteristics of breakers making sure that the external fuses will not burn out and the circuit breakers will not be activated by the inrush current.

Overload Protection

The product is automatically protected from short-circuit current and overcurrent damages when the load current is in the range of 151 to 175% of the rated current.
When the output current falls within the rated range, the overload protection function is automatically cleared.

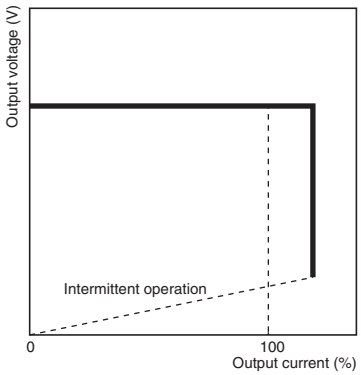

Note: 1. Internal parts may occasionally deteriorate or be damaged if a short-circuited or overcurrent state continues during operation. Be sure to check that the Iout > 100% indicator is not lit or the Iout > 100% signal output is turned OFF before using.
2. Internal parts may possibly deteriorate or be damaged if the Power Supply is used for applications with inrush current or overloading at the load end. Do not use the Power Supply for such applications.

Overvoltage Protection

Overvoltage will be detected to prevent the load from being subjected to excessive voltage when the feedback circuit in the Power Supply fails, etc.
When an excessive voltage that is approximately 130% of the rated output voltage or more is output, the output voltage is cut OFF, preventing damage to the load due to overvoltage.
Reset the input power by turning it OFF for at least three minutes and then turning it back ON again.
Note: Do not turn ON the power again until the cause of the overvoltage has been removed.

INPUT OK Indicator

The INPUT OK indicator will light when the input voltage exceeds the lower limit value of the permissible range.
Note: The voltage may be applied even if the indicator does not light. Be sure to check the input voltage when performing wiring.

DC OK Indicator/Signal Output

The DC OK indicator will light when the output voltage is more than 90% of the rated output voltage, and the internal MOS FET relay is conducted (turned ON).
Note: 1. The output voltage may be generated even if the indicator does not light. Be sure to check the output voltage when connecting to the load.
2. This function monitors the voltage at the power output terminals.
To check the voltage accurately, measure the voltage at the load end.
3. If the output voltage is set to less than 90% of the rated output voltage, the indicator may go off and the signal output may be turned OFF.

Iout > 100% Indicator/Signal Output

The Iout > 100% indicator lights up when the output current exceeds the rated output current, and the internal MOS FET relay is conducted (turned ON).
Note: 1. The Iout > 100% Indicator may light up, and the Iout > 100% Signal Output may turn ON during peak current operation, however, the Power Supply can be used as long as the operating conditions specified in *Peak current* (P.27) are satisfied.
2. Even when the operating conditions for parallel operation are satisfied, the Iout>100% Indicator / Signal Output may operate, so do not use the Iout>100% Indicator / Signal Output.
3. During a short-circuit, the indicator will operate intermittently due to the overload protection function. When this happens, the indicator will blink in accordance with the intermittent operation, and the Iout > 100% signal output will repeated turn ON and OFF.
The shortest ON time of the Iout > 100% signal output during intermittent operation is 5 ms.

Specifications of the Signal Output Terminals (between DC OK Signal Output Terminal and COM Terminal, and between Iout > 100% Signal Output Terminal and COM Terminal)

Since the Signal Output is composed of the MOS FET relay, it does not have any polarity.
30 VDC max., 50 mA max.
Residual voltage when the function is ON: 2 V max.
Leakage current when the function is OFF: 0.1 mA max.
Note: 1. Internal current control circuits are not provided internally for output signals. Do not allow the output current to exceed 50 mA.
2. After completing wiring, confirm that the circuits operate correctly.

Identification of error locations at the input, product, and load side by the Indicator or Signal Output, and troubleshooting for the same (Maintenance point indicator)

Error locations at the input, product, and load side can be identified by the INPUT OK, DC OK, Iout > 100% Indicator / Signal Output.

INPUT OK Indicator	DC OK Indicator/Signal Output	Iout > 100% Indicator/Signal Output	Product operating status	Troubleshooting methods
●	●	○	---	(Normal)
●	●	●	Operation is being performed in excess of the rated output current of the product.	Change to a product with less load or larger output capacity. However, the Power Supply can be used as long as the operating conditions specified in Peak current (P.27) are satisfied.
●	○	●	Overload protection is activated for the product, and the output voltage drops.	Make sure the output line and the load are not short-circuited. If there is no short-circuiting, change to a product with less load or larger output capacity.
●	○	✳		
●	○	○	The product may have failed, or the overvoltage protection may have been activated for the product.	To check for overvoltage protection, turn the input power OFF, and then turn it ON again after 3 minutes or more has elapsed. If no output voltage is output, the product may have failed. Replace the product.
○	○	○	No input voltage is being supplied.	Make sure the circuit breaker connected to the input side has not tripped, or the fuse connected to the input side has not blown. Turn ON the circuit breaker or replace the fuse. Turn the input power ON again, and if no output voltage is output, the product may have failed. Replace the product.

●: Lit / ON ○: Not lit / OFF ✳ Flashing / ON · OFF

Time chart (Operation of the Indicator/Signal Output according to the product status)

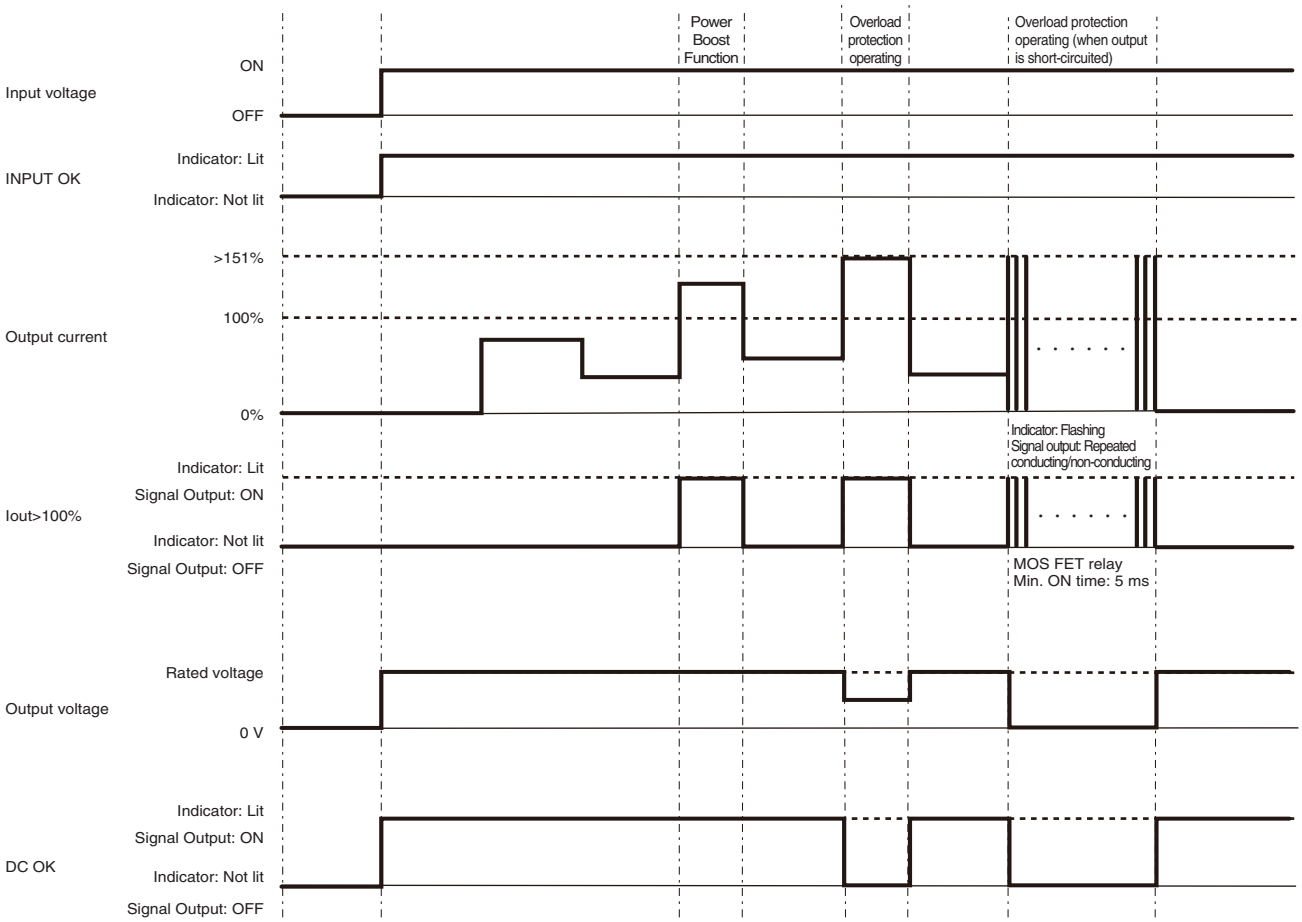

Connections

Block Diagrams

S8VK-WA24024 (240 W)

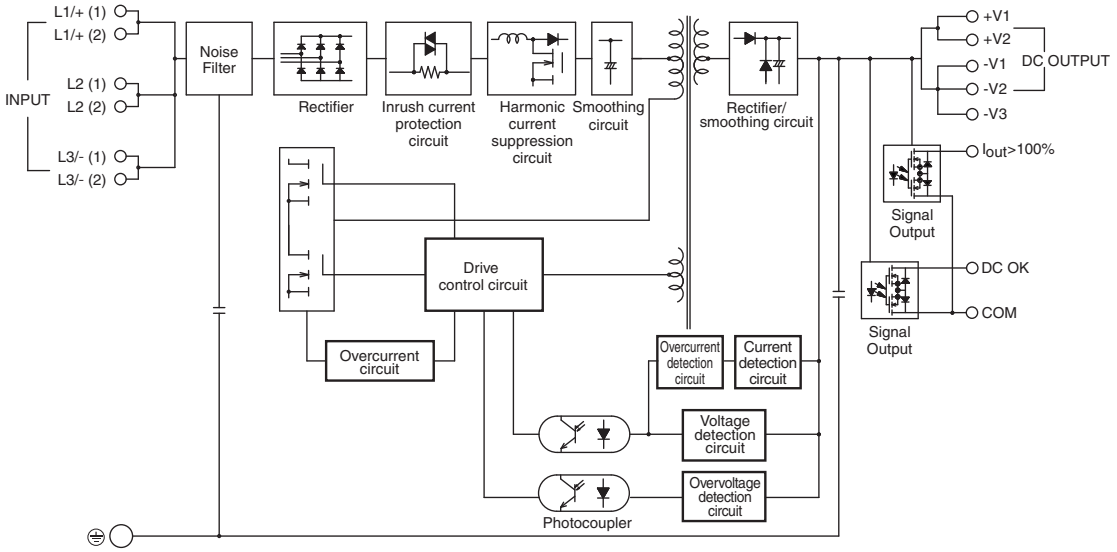

S8VK-WA48024 (480 W)
S8VK-WA96024 (960 W)

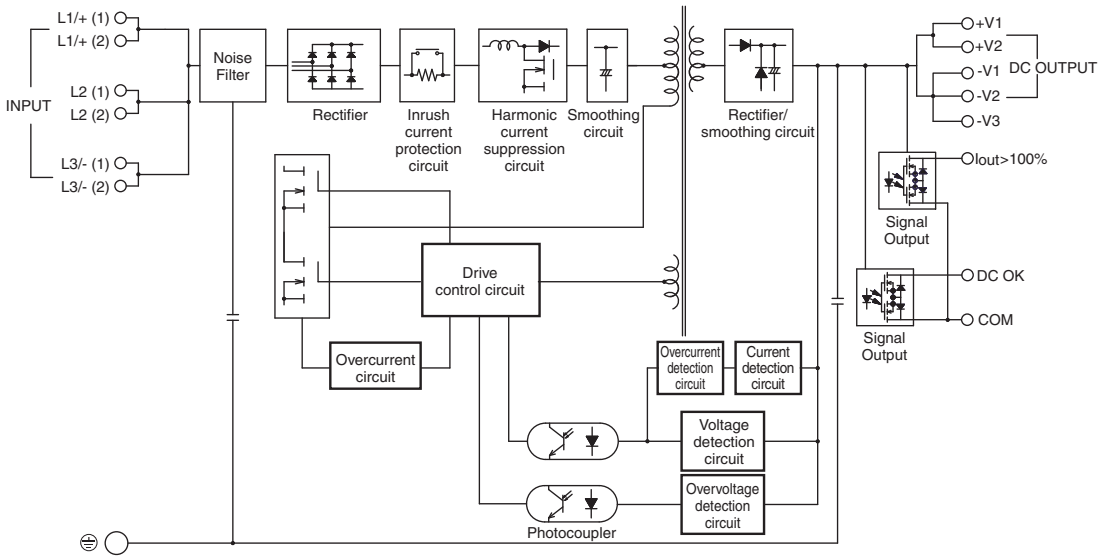

Construction and Nomenclature

Nomenclature

240 W

S8VK-WA24024

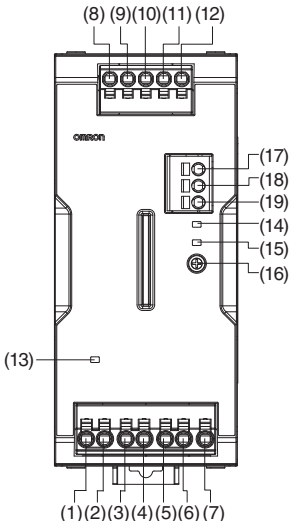

480 W

S8VK-WA48024

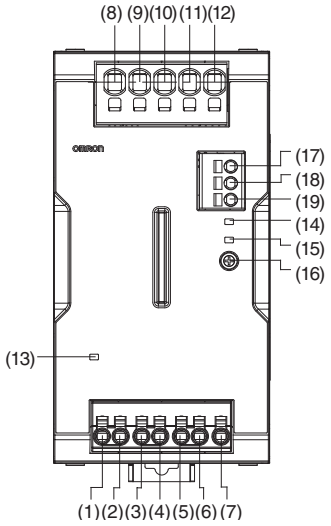

960 W

S8VK-WA96024

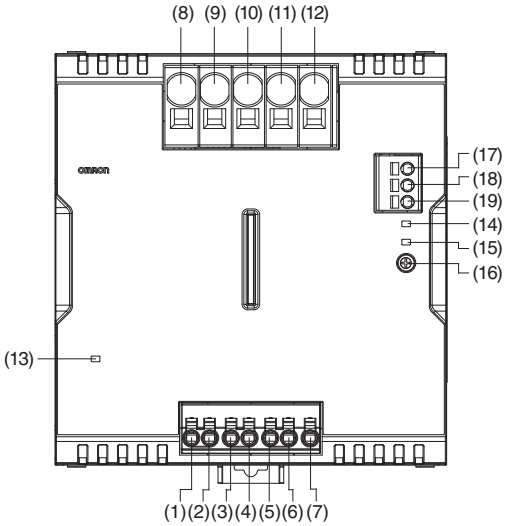

No.	Terminal name	Name	Function
(1)	L1/+ (1)	Input terminals	Connect the input lines to these terminals. ✻1
(2)	L1/+ (2)		
(3)	L2 (1)		
(4)	L2 (2)		
(5)	L3/- (1)		
(6)	L3/- (2)		
(7)	PE	Protective Earth terminal (⏚)	Connect the ground line to this terminal. ✻2
(8)	+V1	DC Output terminals	Connect the load lines to these terminals.
(9)	+V2		
(10)	-V1		
(11)	-V2		
(12)	-V3		
(13)	---	INPUT OK Indicator (INPUT OK: Green)	Lights up when the input voltage exceeds the lower limit value of the permissible range.
(14)	---	Iout > 100% Indicator (Iout > 100%: Yellow)	The Iout > 100% Indicator lights up when the output current exceeds the rated output current.
(15)	---	DC OK Indicator (DC OK: Green)	Lights up when the output voltage is more than 90% of the rated output voltage.
(16)	---	Output voltage adjuster (V.ADJ)	Use to adjust the output voltage.
(17)	Iout > 100%	Iout > 100% Signal Output Terminal	The Iout > 100% Signal Output is output when the output current exceeds the rated output current.
(18)	DC OK	DC OK Signal Output Terminal	Outputs when the output voltage is more than 90% of the rated output voltage.
(19)	COM	COM Terminal	Common terminal for Signal Output (17) and (18).

✻1. For a single-phase power input, connect to (L1/+) and (L3/-).
For a DC power input, connect (L1/+) to (+), and (L3/-) to (-).
(Refer to the wiring diagrams illustrated in *Recommended circuit breakers and fuses* on page 25.)

✻2. This is the protective earth terminal specified in the safety standards. Always ground this terminal.

Engineering Data

Derating Curves

240 W <Horizontal separation: 15 mm or more>

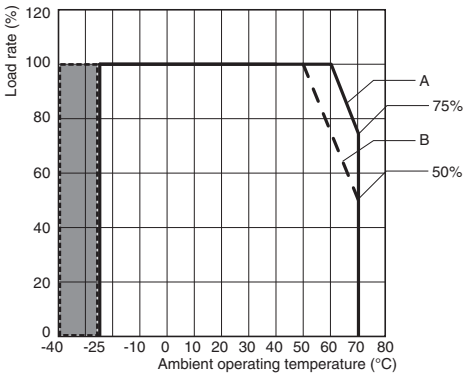

Note: 1. At less than 200 VAC three-phase/single-phase, derate the load at 0.5%/V.
2. At less than 280 VDC, derate the load at 1.0%/V.
3. In the shaded area, time is required to reach the rated output voltage after the input voltage is applied.

A. Standard mounting
B. Face-up mounting

480 W <Horizontal separation: 15 mm or more>

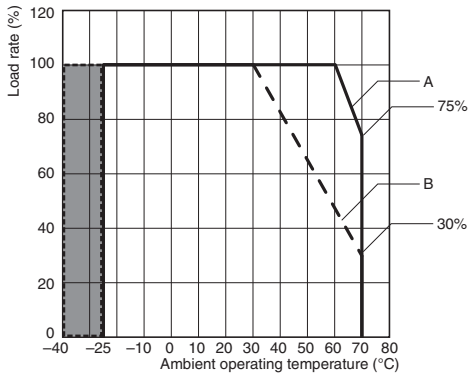

Note: 1. At less than 200 VAC three-phase/single-phase, derate the load at 0.5%/V.
2. At less than 280 VDC, derate the load at 1.0%/V.
3. In the shaded area, time is required to reach the rated output voltage after the input voltage is applied.

A. Standard mounting
B. Face-up mounting

960 W <Horizontal separation: 15 mm or more>

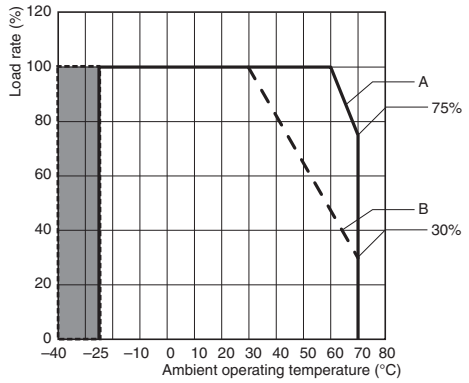

Note: 1. At less than 200 VAC three-phase/single-phase, derate the load at 0.5%/V.
2. At less than 280 VDC, derate the load at 1.0%/V.
3. In the shaded area, time is required to reach the rated output voltage after the input voltage is applied.

A. Standard mounting
B. Face-up mounting

240 W/480 W/960 W <Horizontal separation: less than 15 mm>

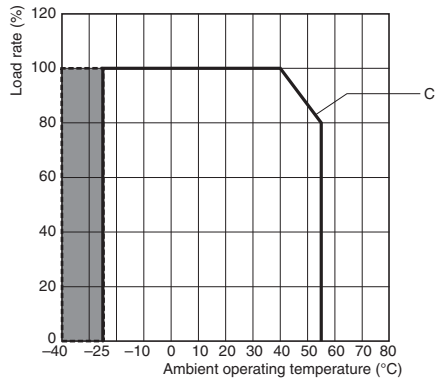

Note: 1. Apply the rated input voltage for both three-phase and single-phase.
2. In the shaded area, time is required to reach the rated output voltage after the input voltage is applied.

C. Front, side-by-side mounting

This Power Supply can be used at an altitude of up to 3,000 m.
Between 2,000 and 3,000 m, derate the load according to the following derating curve.

240 W/480 W/960 W <Horizontal separation: 15 mm or more>

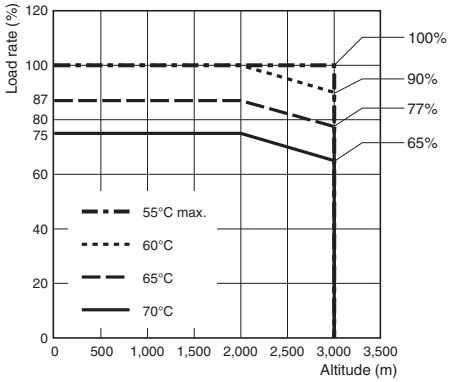

Note: 1. At less than 200 VAC three-phase/single-phase, derate the load at 0.5%/V.
2. At less than 280 VDC, derate the load at 1.0%/V.

A. Standard mounting

240 W/480 W/960 W <Horizontal separation: less than 15 mm>

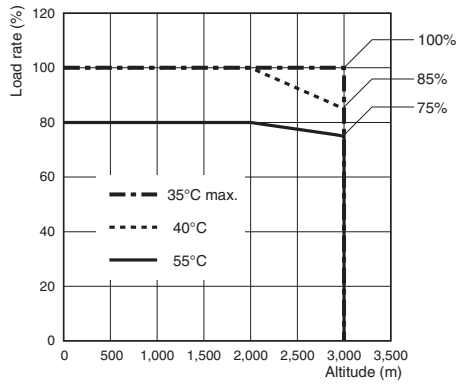

Note: Apply the rated input voltage for both three-phase and single-phase.

C. Front, side-by-side mounting

S8VK-WA

Dimensions

(Unit: mm)

S8VK-WA24024

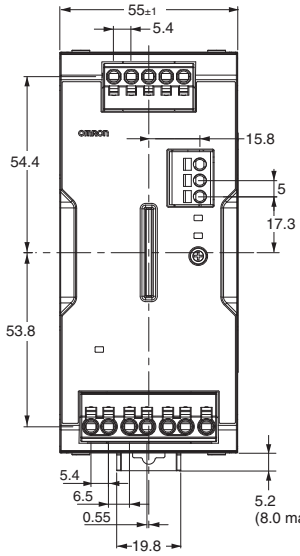

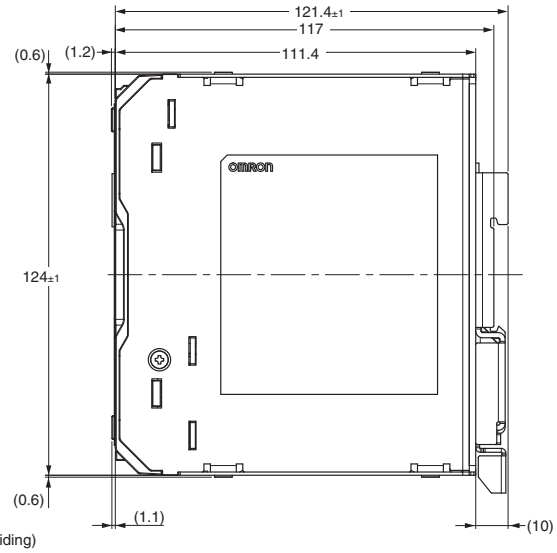

S8VK-WA48024

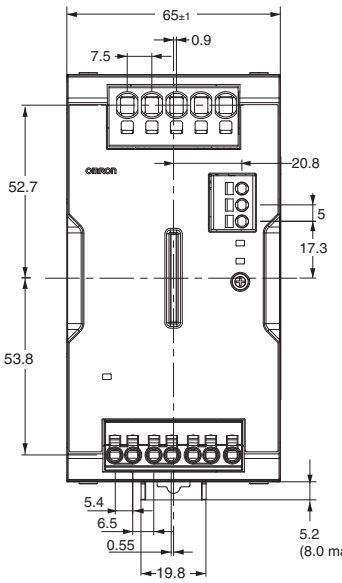

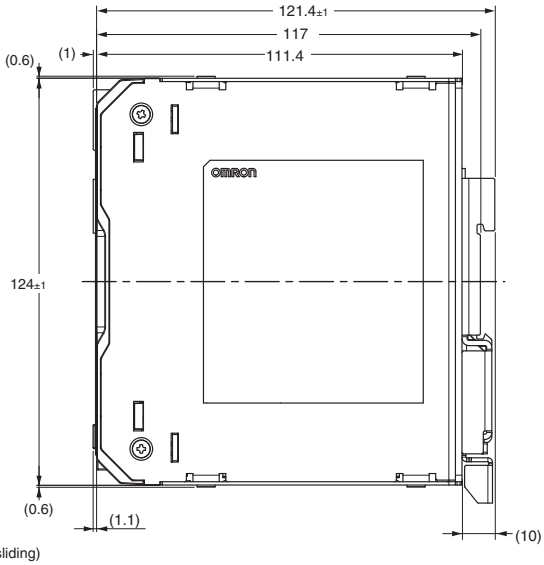

S8VK-WA96024

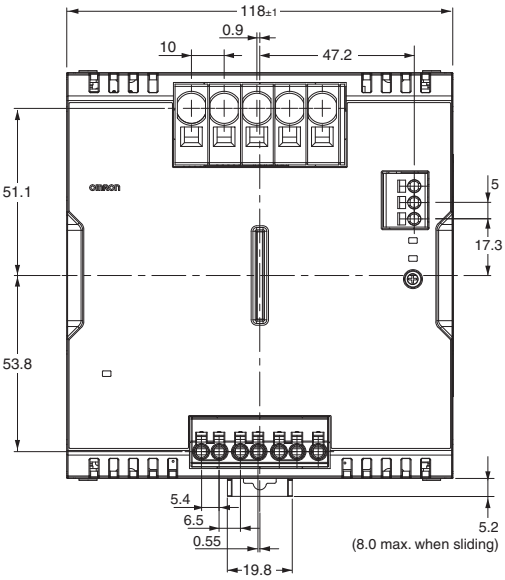

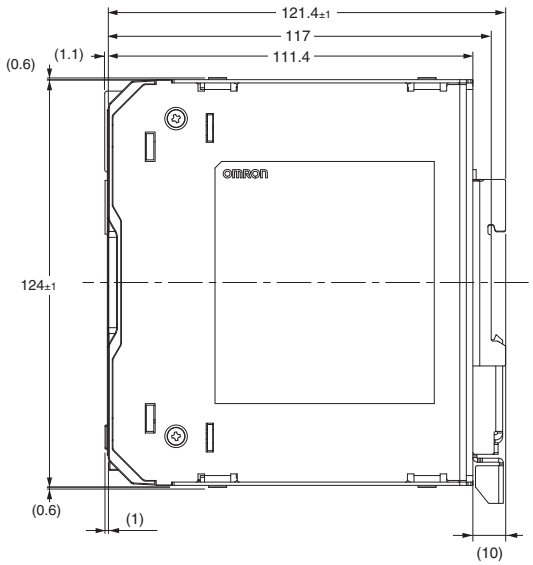

Switch Mode Power Supply (240/480/960-W Models)

S8VK-WB

Even more compact three-phase 380 to 480 V input power supplies. Reduces wiring work with the Push-In Plus terminals. With a line-up that includes 24 VDC and 48 VDC models.

246437

- Can operate at an ambient temperature of -40 to +70°C ✻1
- Side-by-side Mounting enabled ✻1 ✻2
- Complies with SEMI F47-0706 standard ✻3
- Certification for 3,000 m altitude ✻3
- Coated PCBs for Better Resistance to Environment
- Equipped with signal output that indicates DC OK and the overload status

⚠ Refer to *Safety Precautions* on page 24.

✻1. For details, refer to *Derating Curves* on page 20.
✻2. Refer to the Front, Side-by-side mounting on page 24.
✻3. For details, refer to *Standard Compliance* on page 15.

Lineup

Output voltage	Power rating		
	240 W	480 W	960 W
24 V	Released	Released	Released
48 V	Released	Released	Released

Model Number Structure

Model Number Legend

Not all combinations are possible. Refer to List of Models in Ordering Information, below.

S8VK-WB □□□ □□

Series name (1) (2) (3)

(1) Rated input voltage

Code	Rated input voltage
B	380 to 480

(2) Power rating

Code	Power rating
240	240 W
480	480 W
960	960 W

(3) Output voltage

Code	Output voltage (VDC)
24	24 V
48	48 V

Ordering Information

List of Models

Power rating	Rated input voltage	Rated output voltage (VDC)	Rated output current	Maximum boost current	Model
240 W	Three-phase / two-phase 380 to 480 VAC (Allowable range: Three-phase / two-phase 320 to 576 VAC, 450 to 810 VDC)	24 V	10 A	15 A	**S8VK-WB24024**
		48 V	5 A	7.5 A	**S8VK-WB24048**
480 W		24 V	20 A	30 A	**S8VK-WB48024**
		48 V	10 A	15 A	**S8VK-WB48048**
960 W		24 V	40 A	60 A	**S8VK-WB96024**
		48 V	20 A	30 A	**S8VK-WB96048**

Accessories (Order separately)

Refer to page 22 for S8VK-WA/S8VK-WB Common Accessories.

Ratings, Characteristics, and Functions

Item		Power rating / Output voltage	240W / 24V	480W / 24V	960W / 24V
Efficiency ✻1		Three-phase 400 VAC input	93% typ.	94% typ.	95% typ.
		Two-phase 400 VAC input	93% typ.	94% typ.	95% typ.
Input conditions	Input voltage range ✻2		Three-phase/two-phase 320 to 576 VAC, 450 to 810 VDC		
	Frequency ✻2		50/60 Hz (47 to 63 Hz)		
	Input current ✻1	Three-phase 400 VAC input	0.41 A typ.	0.79 A typ.	1.6 A typ.
		Two-phase 400 VAC input	0.75 A typ.	1.5 A typ.	3.0 A typ.
	Power factor ✻1	Three-phase 400 VAC input	0.9 min.		
	Leakage current ✻3	Three-phase 400 VAC input	3.5 mA max.		
	Inrush current ✻4	Three-phase 400 VAC input	1.7 A typ.	3.0 A typ.	10.6 A typ.
Output characteristics	Rated output current		10 A	20 A	40 A
	Power Boost Function		15 A	30 A	60 A
	Voltage adjustment range ✻5		24 to 29.5 V (with V.ADJ)		24 to 28 V (with V.ADJ)
	Ripple noise voltage ✻6	Three-phase 380 to 480 VAC input	100 mV p-p max. at 20 MHz of bandwidth	80 mV p-p max. at 20 MHz of bandwidth	50 mV p-p max. at 20 MHz of bandwidth
	Input variation influence ✻7		0.5% max.		
	Load variation influence ✻8		1.5% max.		
	Temperature variation influence	200 to 240 VAC input	0.05%/°C max.		
	Startup time ✻9	Three-phase 400 VAC input	1,000 ms max.		
	Output hold time ✻9	Three-phase 400 VAC input	30 ms typ.	25 ms typ.	20 ms typ.
Additional functions	Overload protection		Yes, automatic reset, intermittent operation type Refer to *Overload Protection* on page 16.		
	Overvoltage protection		Yes, 130% or higher of rated output voltage, power shut off (shut off the input voltage and turn on the input again), Refer to *Overvoltage Protection* on page 16.		
	Series operation		Yes (For up to two Power Supplies; external diodes required.)		
	Parallel operation		Yes (For up to two Power Supplies), Refer to *Parallel Operation* on page 28.		
	INPUT OK Indicator		Yes (LED: Green)		
	DC OK Indicator		Yes (LED: Green)		
	Iout > 100% Indicator		Yes (LED: Yellow)		
	DC OK Signal Output		Yes (MOS FET relay output 30 VDC max., 50 mA max.)		
	Iout > 100% signal output		Yes (MOS FET relay output 30 VDC max., 50 mA max.)		
Insulation	Withstand voltage		3.0 kVAC for 1 min. (between all input terminals and all output terminals, signal output terminals), cutoff current 20 mA		
			2.5 kVAC for 1 min. (between all input terminals and PE terminals), cutoff current 30 mA		
			1.0 kVAC for 1 min. (between all output terminals, signal output terminals and PE terminals), cutoff current 25 mA		
			0.5 kVAC for 1 min. (between all output terminals and all signal output terminals), cutoff current 10 mA		
	Insulation resistance		100 MΩ min. (between all output terminals, signal output terminals and all input terminals / PE terminals) at 500 VDC		
Environment	Ambient operating temperature ✻10		-40 to 70°C (Derating is required according to the temperature. Refer to *Engineering Data* on page 20.) (with no condensation or icing)		
	Storage temperature		-40 to 85°C (with no condensation or icing)		
	Ambient operating humidity		95% max. (Storage humidity: 95% max.)		
	Vibration resistance		10 to 55 Hz, maximum 5 G, 0.42 mm single amplitude for 2 h each in X, Y, and Z directions		
	Shock resistance		294 m/s^2, 3 times each in ±X, ±Y, ±Z directions		
Reliability	MTBF ✻11		170,000 hrs typ.	160,000 hrs typ.	140,000 hrs typ.
	Expected life ✻12		10 years min.		
Construction	Weight		890 g max.	1,200 g max.	1,800 g max.
	Cooling fan		No		
	Degree of protection		IP20 by EN/IEC 60529		

Note: For ✻1 to ✻12, refer to page 15.

Item		Power rating / Output voltage	240W / 48V	480W / 48V	960W / 48V
Efficiency ✻1		Three-phase 400 VAC input	93% typ.	94% typ.	96% typ.
		Two-phase 400 VAC input	93% typ.	94% typ.	95% typ.
Input conditions	Input voltage range ✻2		Three-phase/two-phase 320 to 576 VAC, 450 to 810 VDC		
	Frequency ✻2		50/60 Hz (47 to 63 Hz)		
	Input current ✻1	Three-phase 400 VAC input	0.41 A typ.	0.78 A typ.	1.6 A typ.
		Two-phase 400 VAC input	0.75 A typ.	1.5 A typ.	2.9 A typ.
	Power factor ✻1	Three-phase 400 VAC input	0.9 min.		
	Leakage current ✻3	Three-phase 400 VAC input	3.5 mA max.		
	Inrush current ✻4	Three-phase 400 VAC input	1.7 A typ.	3.0 A typ.	10.6 A typ.
Output characteristics	Rated output current		5 A	10 A	20 A
	Power Boost Function		7.5 A	15 A	30 A
	Voltage adjustment range ✻5		48 to 56 V (with V.ADJ)		
	Ripple noise voltage ✻6	Three-phase 380 to 480 VAC input	50 m V p-p max. at 20 MHz of bandwidth	60 mV p-p max. at 20 MHz of bandwidth	60 mV p-p max. at 20 MHz of bandwidth
	Input variation influence ✻7		0.5% max.		
	Load variation influence ✻8		1.5% max.		
	Temperature variation influence	380 to 480 VAC input	0.05%/°C max.		
	Startup time ✻9	Three-phase 400 VAC input	1,000 ms max.		
	Output hold time ✻9	Three-phase 400 VAC input	30 ms typ.	25 ms typ.	20 ms typ.
Additional functions	Overload protection		Yes, automatic reset, intermittent operation type Refer to *Overload Protection* on page 16.		
	Overvoltage protection		Yes, 130% or higher of rated output voltage, power shut off (shut off the input voltage and turn on the input again), Refer to *Overvoltage Protection* on page 16.		
	Series operation		Yes (For up to two Power Supplies; external diodes required.)		
	Parallel operation		Yes (For up to two Power Supplies), Refer to *Parallel Operation* on page 28.		
	INPUT OK Indicator		Yes (LED: Green)		
	DC OK Indicator		Yes (LED: Green)		
	Iout > 100% Indicator		Yes (LED: Yellow)		
	DC OK Signal Output		Yes (MOS FET relay output 30 VDC max., 50 mA max.)		
	Iout > 100% signal output		Yes (MOS FET relay output 30 VDC max., 50 mA max.)		
Insulation	Withstand voltage		3.0 kVAC for 1 min. (between all input terminals and all output terminals, signal output terminals), cutoff current 20 mA		
			2.5 kVAC for 1 min. (between all input terminals and PE terminals), cutoff current 20 mA		
			1.0 kVAC for 1 min. (between all output terminals, signal output terminals and PE terminals), cutoff current 30 mA		
			0.5 kVAC for 1 min. (between all output terminals and all signal output terminals), cutoff current 10 mA		
	Insulation resistance		100 MΩ min. (between all output terminals, signal output terminals and all input terminals / PE terminals) at 500 VDC		
Environment	Ambient operating temperature ✻10		-40 to 70°C (Derating is required according to the temperature. Refer to *Engineering Data* on page 20.) (with no condensation or icing)		
	Storage temperature		-40 to 85°C (with no condensation or icing)		
	Ambient operating humidity		95% max. (Storage humidity: 95% max.)		
	Vibration resistance		10 to 55 Hz, maximum 5 G, 0.42 mm single amplitude for 2 h each in X, Y, and Z directions		
	Shock resistance		294 m/s^2, 3 times each in ±X, ±Y, ±Z directions		
Reliability	MTBF ✻11		170,000 hrs typ.	160,000 hrs typ.	140,000 hrs typ.
	Expected life ✻12		10 years min.		
Construction	Weight		890 g max.	1,200 g max.	1,800 g max.
	Cooling fan		No		
	Degree of protection		IP20 by EN/IEC 60529		

Note: For ✻1 to ✻12, refer to page 15.

Item			Power rating / Output voltage (VDC)	240 W / 24 V/48 V	480 W / 24 V/48 V	960 W / 24 V/48 V
Standards ✻14	Harmonic current emissions			Conforms to EN 61000-3-2 (three-phase/two-phase) ✻13		
	EMI	Conducted emissions		Conforms to EN 61204-3 Class B, EN 55011 Class B (three-phase) Conforms to EN 61204-3 Class A, EN 55011 Class A (two-phase)		
		Radiated emissions				
	EMS			Conforms to EN 61204-3 high severity levels		
	Safety standards			UL 508 Listing UL 62368-1 (Recognition) OVC II (≤ 3000 m) Pol2 CSA C22.2 No.62368-1 OVC II (≤ 3000 m) Pol2 EN/IEC 62477-1 OVC III (≤ 2000 m) OVC II (2000 m < and ≤ 3000 m) Pol2 EN/IEC 62368-1 OVC II (≤ 3000 m) Pol2 EAC (TR CU 004 / 2011, TR CU 020 / 2011) RCM (EN61000-6-4) Complies with PELV (EN/IEC 60204-1) Complies with EN/IEC 61558-2-16		
	SEMI			Complies with SEMI F47-0706 (three-phase 380 to 480 VAC input)		

✻1. The value is when both rated output voltage and rated output current are satisfied.
✻2. Do not use an inverter output for the product. Inverters with an output frequency of 50/60 Hz are available, but the rise in the internal temperature of the product may result in ignition or burning. If the input is connected to a UPS, do not connect a UPS with a square-wave output. Doing so will cause the internal temperature of the product to increase, possibly causing smoking or burning.
✻3. The value is determined according to the Electrical Appliances and Material Safety Act.
✻4. Values for a cold start at 25°C. Refer to *Inrush Current, Startup Time, and Output Hold Time* on page 16.
✻5. If the output voltage adjuster (V. ADJ) is turned, the voltage will increase by more than the voltage adjustment range.
When adjusting the output voltage, confirm the actual output voltage from the product and be sure that the load is not damaged.
✻6. The value is when both rated output voltage and rated output current are satisfied.
A characteristic when the ambient operating temperature is 25°C.
✻7. This is the maximum variation in the output voltage when the input voltage is gradually changed within the allowable input voltage range at the rated output voltage and rated output current.
✻8. 380 to 480 VAC input, in the range of 0 A to the rated output current.
✻9. This is the value when both rated output voltage and rated output current are satisfied and at room temperature (25°C).
Refer to *Inrush Current, Startup Time, and Output Hold Time* on page 16 for details.
✻10. At -40 to -25°C, time will be required before the rated output voltage is output after the input voltage is input.
✻11. MTBF is calculated according to JEITA RCR-9102.
✻12. Refer to *Recommended Replacement Periods and Periodic Replacement for Preventive Maintenance* on page 32 for details.
✻13. When using 2-phase input, conforms to EN 61000-3-2 under the following condition.
960W: At the rated output voltage, and 80% or less than the rated output current
✻14. Refer to *Standard Compliance* below for details.

Standard Compliance

- To comply with PELV output requirements for EN/IEC 60204-1, ground the negative side of the output (-V) to a protective earth (PE).
- EN/IEC 61558-2-16
  The S8VK-WA was designed based on EN/IEC 61558-2-16.
  Currently, IEC 61558-2-17 has been replaced by IEC 61558-2-16.
  When certification was received for EN/IEC 60204-1 (Machinery Safety), it was necessary to go through a control transformer to the control circuits. However, a control transformer is not always necessary for product that have been certified for the safety standard for OVCIII or for product that use a transformer that complies with EN/IEC 61558-2-16.
- For the S8VK-WB, the DC input is not compliant with Safety standards.

Inrush Current, Startup Time, and Output Hold Time

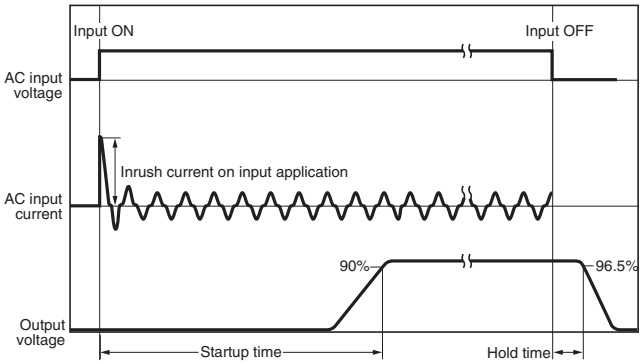

Note: Twice the normal inrush current will flow during parallel operation or for backup operation. Therefore, check the fusing characteristics of fuses and operating characteristics of breakers making sure that the external fuses will not burn out and the circuit breakers will not be activated by the inrush current.

Overload Protection

The product is automatically protected from short-circuit current and overcurrent damages when the load current is in the range of 151 to 175% of the rated current.
When the output current falls within the rated range, the overload protection function is automatically cleared.

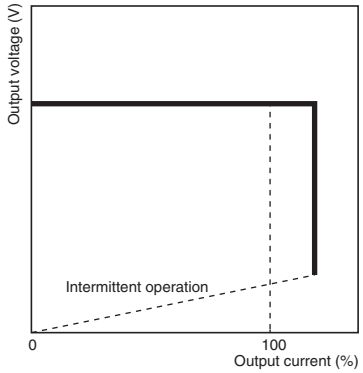

Note: 1. Internal parts may occasionally deteriorate or be damaged if a short-circuited or overcurrent state continues during operation. Be sure to check that the Iout > 100% indicator is not lit or the Iout > 100% signal output is turned OFF before using.
2. Internal parts may possibly deteriorate or be damaged if the Power Supply is used for applications with inrush current or overloading at the load end. Do not use the Power Supply for such applications.

Overvoltage Protection

Overvoltage will be detected to prevent the load from being subjected to excessive voltage when the feedback circuit in the Power Supply fails, etc.
When an excessive voltage that is approximately 130% of the rated output voltage or more is output, the output voltage is cut OFF, preventing damage to the load due to overvoltage.
Reset the input power by turning it OFF for at least three minutes and then turning it back ON again.
Note: Do not turn ON the power again until the cause of the overvoltage has been removed.

INPUT OK Indicator

The INPUT OK indicator will light when the input voltage exceeds the lower limit value of the permissible range.
Note: The voltage may be applied even if the indicator does not light. Be sure to check the input voltage when performing wiring.

DC OK Indicator/Signal Output

The DC OK indicator will light when the output voltage is more than 90% of the rated output voltage, and the internal MOS FET relay is conducted (turned ON).
Note: 1. The output voltage may be generated even if the indicator does not light. Be sure to check the output voltage when connecting to the load.
2. This function monitors the voltage at the power output terminals.
To check the voltage accurately, measure the voltage at the load end.
3. If the output voltage is set to less than 90% of the rated output voltage, the indicator may go off and the signal output may be turned OFF.

Iout > 100% Indicator/Signal Output

The Iout > 100% indicator lights up when the output current exceeds the rated output current, and the internal MOS FET relay is conducted (turned ON).
Note: 1. The Iout > 100% Indicator may light up, and the Iout > 100% Signal Output may turn ON during peak current operation, however, the Power Supply can be used as long as the operating conditions specified in *Peak current* (P.27) are satisfied.
2. Even when the operating conditions for parallel operation are satisfied, the Iout>100% Indicator / Signal Output may operate, so do not use the Iout>100% Indicator / Signal Output.
3. During a short-circuit, the indicator will operate intermittently due to the overload protection function. When this happens, the indicator will blink in accordance with the intermittent operation, and the Iout > 100% signal output will repeated turn ON and OFF.
The shortest ON time of the Iout > 100% signal output during intermittent operation is 5 ms.

Specifications of the Signal Output Terminals (between DC OK Signal Output Terminal and COM Terminal, and between Iout > 100% Signal Output Terminal and COM Terminal)

Since the Signal Output is composed of the MOS FET relay, it does not have any polarity.
30 VDC max., 50 mA max.
Residual voltage when the function is ON: 2 V max.
Leakage current when the function is OFF: 0.1 mA max.
Note: 1. Internal current control circuits are not provided internally for output signals. Do not allow the output current to exceed 50 mA.
2. After completing wiring, confirm that the circuits operate correctly.

Identification of error locations at the input, product, and load side by the Indicator or Signal Output, and troubleshooting for the same (Maintenance point indicator)

Error locations at the input, product, and load side can be identified by the INPUT OK, DC OK, Iout > 100% Indicator / Signal Output.

INPUT OK Indicator	DC OK Indicator/Signal Output	Iout > 100% Indicator/Signal Output	Product operating status	Troubleshooting methods
●	●	○	---	(Normal)
●	●	●	Operation is being performed in excess of the rated output current of the product.	Change to a product with less load or larger output capacity. However, the Power Supply can be used as long as the operating conditions specified in Peak current (P.27) are satisfied.
●	○	●	Overload protection is activated for the product, and the output voltage drops.	Make sure the output line and the load are not short-circuited. If there is no short-circuiting, change to a product with less load or larger output capacity.
●	○	✳		
●	○	○	The product may have failed, or the overvoltage protection may have been activated for the product.	To check for overvoltage protection, turn the input power OFF, and then turn it ON again after 3 minutes or more has elapsed. If no output voltage is output, the product may have failed. Replace the product.
○	○	○	No input voltage is being supplied.	Make sure the circuit breaker connected to the input side has not tripped, or the fuse connected to the input side has not blown. Turn ON the circuit breaker or replace the fuse. Turn the input power ON again, and if no output voltage is output, the product may have failed. Replace the product.

●: Lit / ON ○: Not lit / OFF ✳ Flashing / ON · OFF

Time chart (Operation of the Indicator/Signal Output according to the product status)

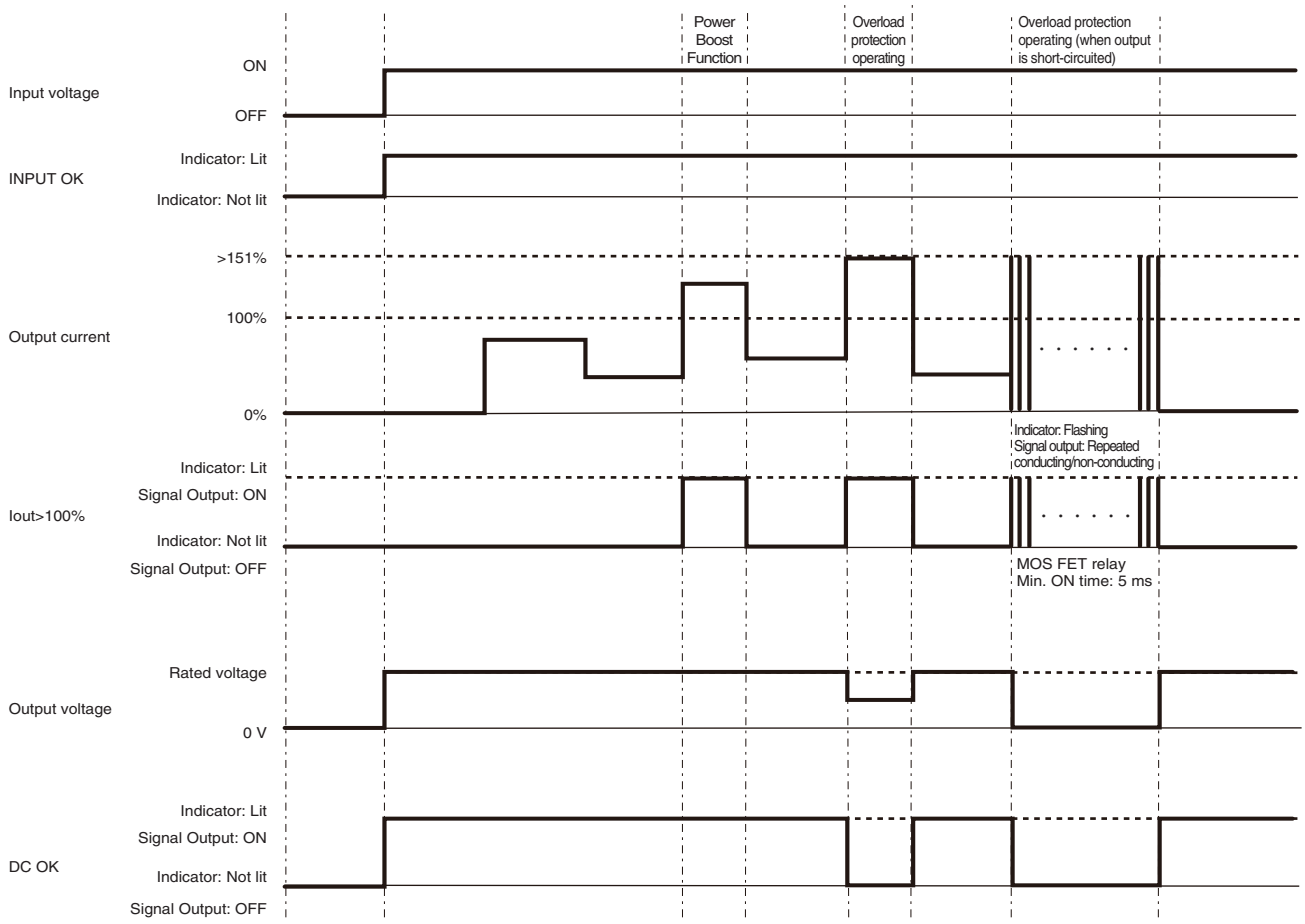

Connections

Block Diagrams

S8VK-WB□□□□□

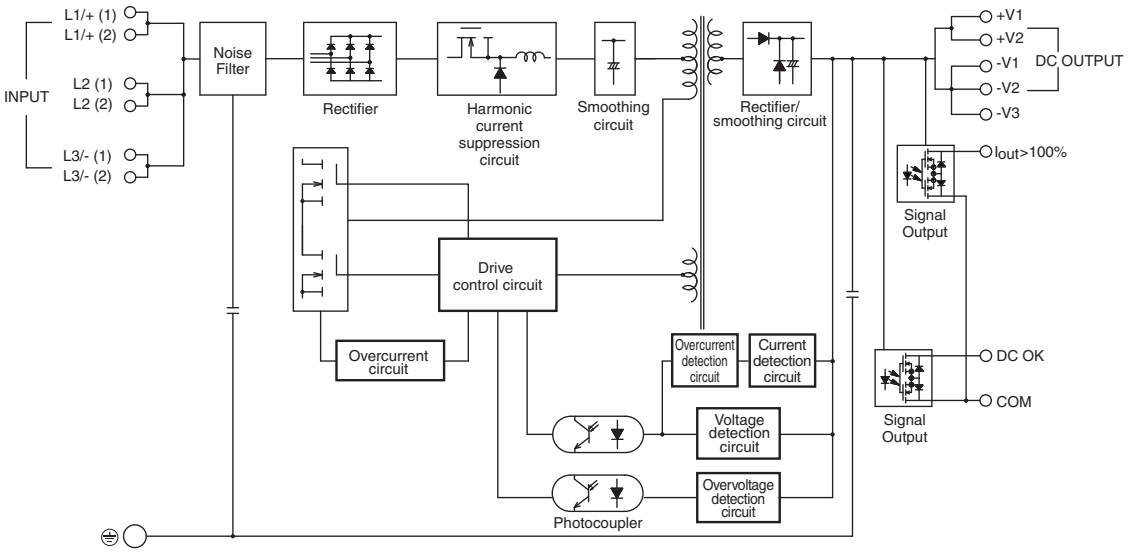

Construction and Nomenclature

Nomenclature

240 W

S8VK-WB240□□

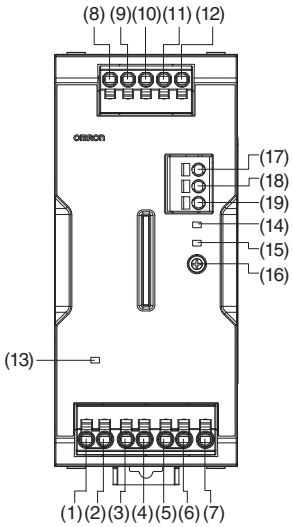

480 W

S8VK-WB480□□

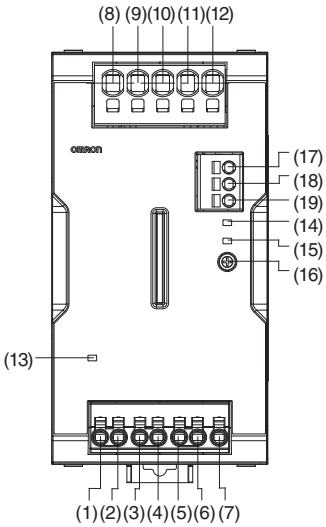

960 W

S8VK-WB960□□

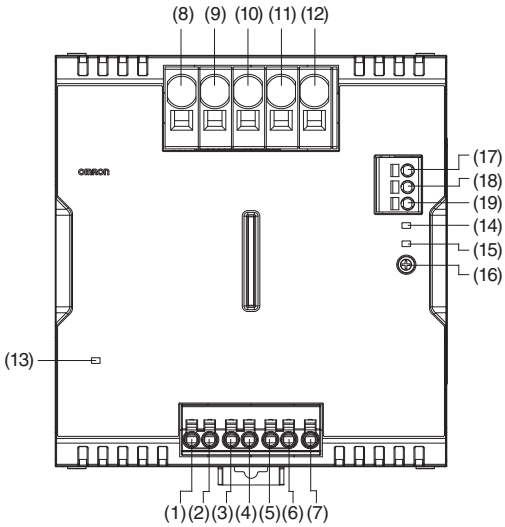

No.	Terminal name	Name	Function
(1)	L1/+ (1)	Input terminals	Connect the input lines to these terminals. ✻1
(2)	L1/+ (2)		
(3)	L2 (1)		
(4)	L2 (2)		
(5)	L3/- (1)		
(6)	L3/- (2)		
(7)	PE	Protective Earth terminal (⏚)	Connect the ground line to this terminal. ✻2
(8)	+V1	DC Output terminals	Connect the load lines to these terminals.
(9)	+V2		
(10)	-V1		
(11)	-V2		
(12)	-V3		
(13)	---	INPUT OK Indicator (INPUT OK: Green)	Lights up when the input voltage exceeds the lower limit value of the permissible range.
(14)	---	Iout > 100% Indicator (Iout > 100%: Yellow)	The Iout > 100% Indicator lights up when the output current exceeds the rated output current.
(15)	---	DC OK Indicator (DC OK: Green)	Lights up when the output voltage is more than 90% of the rated output voltage.
(16)	---	Output voltage adjuster (V.ADJ)	Use to adjust the output voltage.
(17)	Iout > 100%	Iout > 100% Signal Output Terminal	The Iout > 100% Signal Output is output when the output current exceeds the rated output current.
(18)	DC OK	DC OK Signal Output Terminal	Outputs when the output voltage is more than 90% of the rated output voltage.
(19)	COM	COM Terminal	Common terminal for Signal Output (17) and (18).

✻1. For a two-phase power input, connect to (L1/+) and (L3/-).
For a DC power input, connect (L1/+) to (+), and (L3/-) to (-).
(Refer to the wiring diagrams illustrated in *Recommended circuit breakers and fuses* on page 25.)

✻2. This is the protective earth terminal specified in the safety standards. Always ground this terminal.

Engineering Data

Derating Curves

240 W <Horizontal separation: 15 mm or more>

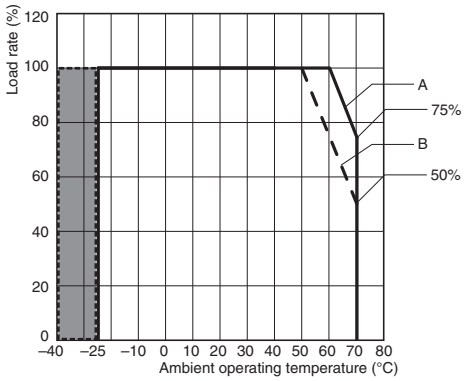

Note: 1. At more than 528 VAC three-phase, derate the load at 0.5%/V.
2. At less than 380 VAC two-phase or at more than 528 VAC two-phase, derate the load at 0.5%/V.
3. At more than 746 VDC, derate the load at 0.5%/V.
4. In the shaded area, time is required to reach the rated output voltage after the input voltage is applied.

A. Standard mounting, B. Face-up mounting

480 W <Horizontal separation: 15 mm or more>

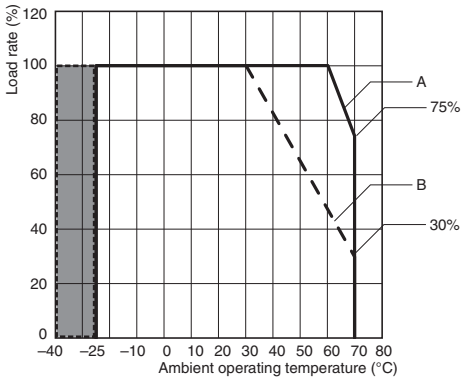

Note: 1. At more than 528 VAC three-phase, derate the load at 0.5%/V.
2. At less than 380 VAC two-phase or at more than 528 VAC two-phase, derate the load at 0.5%/V.
3. At more than 746 VDC, derate the load at 0.5%/V.
4. In the shaded area, time is required to reach the rated output voltage after the input voltage is applied.

A. Standard mounting, B. Face-up mounting

960 W <Horizontal separation: 15 mm or more>

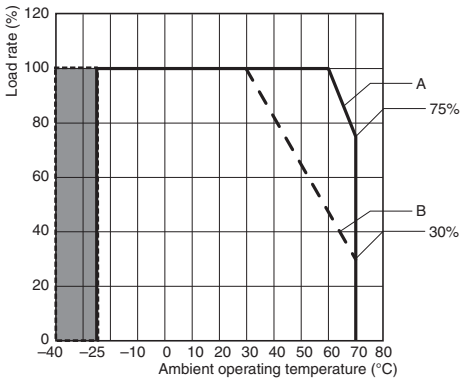

Note: 1. At more than 528 VAC three-phase, derate the load at 0.5%/V.
2. At less than 380 VAC two-phase or at more than 528 VAC two-phase, derate the load at 0.5%/V.
3. At more than 746 VDC, derate the load at 0.5%/V.
4. In the shaded area, time is required to reach the rated output voltage after the input voltage is applied.

A. Standard mounting, B. Face-up mounting

240 W/480 W/960 W <Horizontal separation: less than 15 mm>

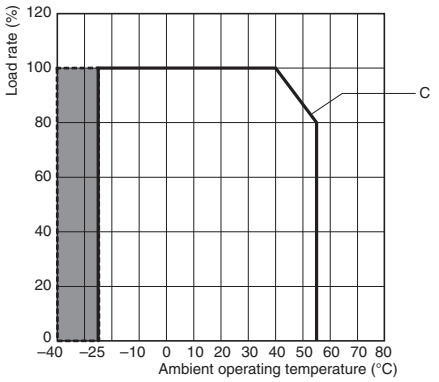

Note: 1. Apply the rated input voltage for both three-phase and two-phase.
2. In the shaded area, time is required to reach the rated output voltage after the input voltage is applied.

C. Front, side-by-side mounting

This Power Supply can be used at an altitude of up to 3,000 m.
Between 2,000 and 3,000 m, derate the load according to the following derating curve.

240 W/480 W/960 W <Horizontal separation: 15 mm or more>

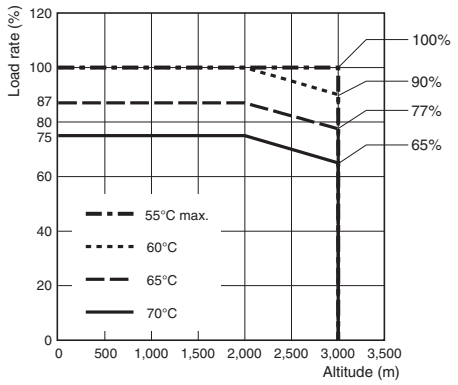

Note: 1. At more than 528 VAC three-phase, derate the load at 0.5%/V.
2. At less than 380 VAC two-phase or at more than 528 VAC two-phase, derate the load at 0.5%/V.
3. At more than 746 VDC, derate the load at 0.5%/V.

A. Standard mounting

240 W/480 W/960 W <Horizontal separation: less than 15 mm>

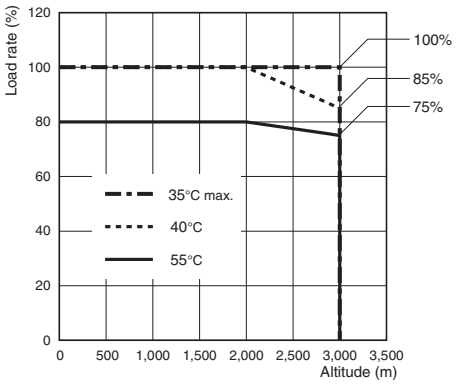

Note: Apply the rated input voltage for both three-phase and two-phase.

C. Front, side-by-side mounting

Dimensions

(Unit: mm)

S8VK-WB240□□

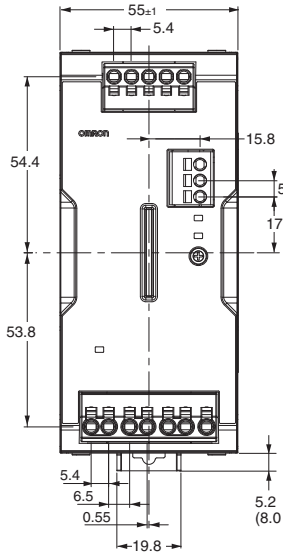

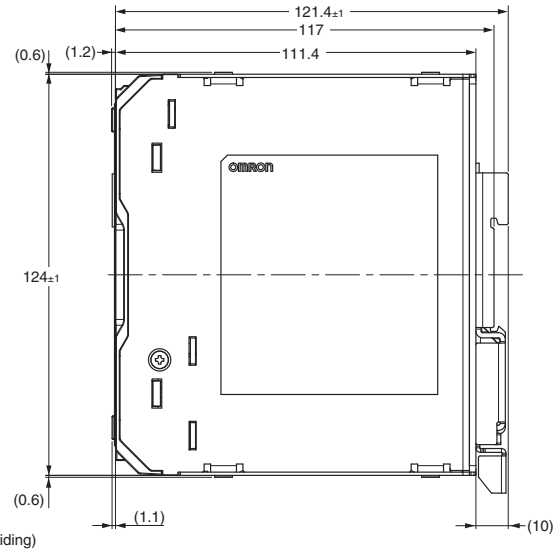

S8VK-WB480□□

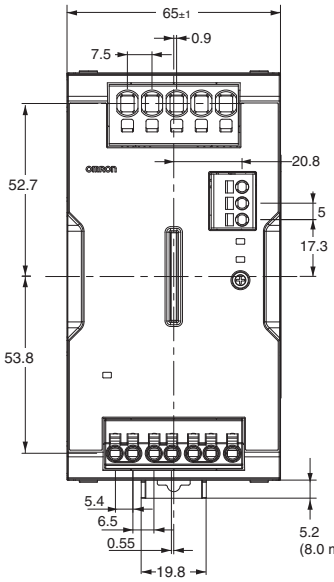

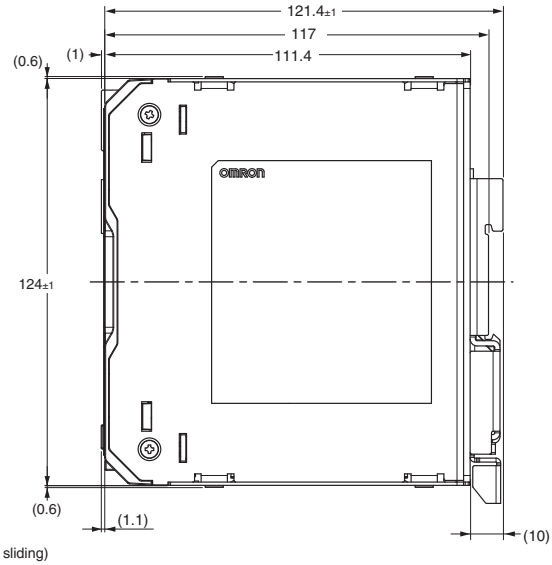

S8VK-WB960□□

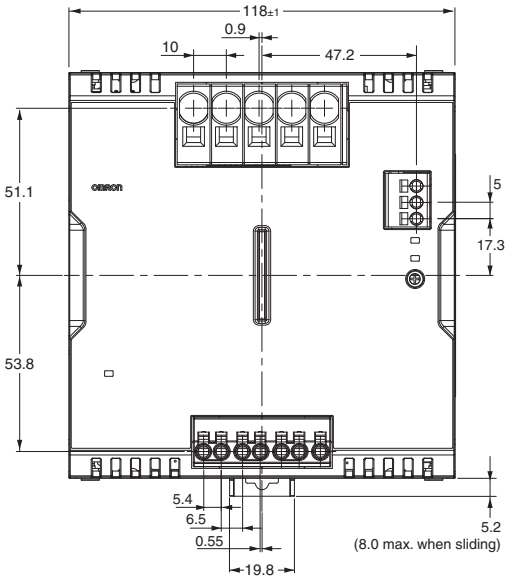

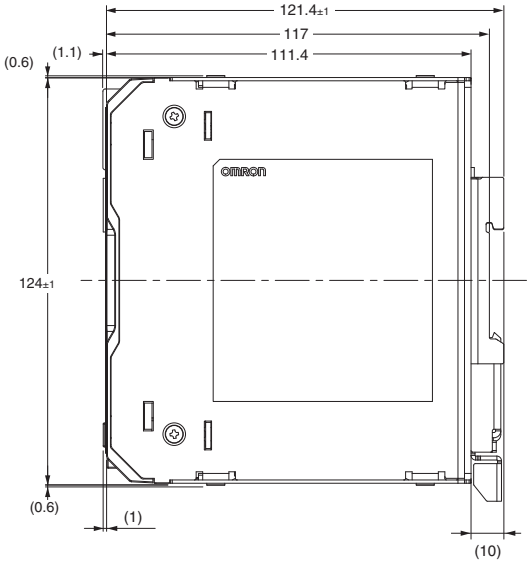

Accessories (Order separately)

List of Models

Mounting Brackets (Order Separately)

Product name	Model
Front Mounting Bracket (for 240 W)	**S82Y-VKW20F**
Front Mounting Bracket (for 480 W)	**S82Y-VKW40F**
Front Mounting Bracket (for 960 W)	**S82Y-VKW90F**

DIN Rail Mounting Parts (Order Separately)

Part name	Model
Support Rail (Aluminum)	**PFP-100N**
	PFP-50N
	PFP-100N2
End Plate	**PFP-M**

Dimensions

(Unit: mm)

Mounting Brackets (Order Separately)

Name	Model	Dimensions	Appearance
Front mounting bracket (For 240 W models)	S82Y-VKW20F	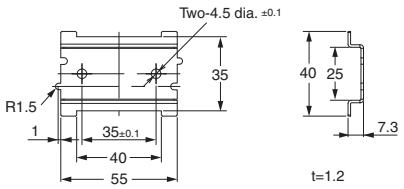	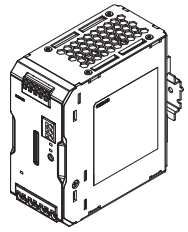
Front mounting bracket (For 480 W models)	S82Y-VKW40F	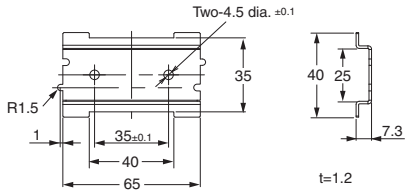	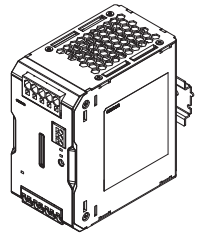
Front mounting bracket (For 960 W models)	S82Y-VKW90F	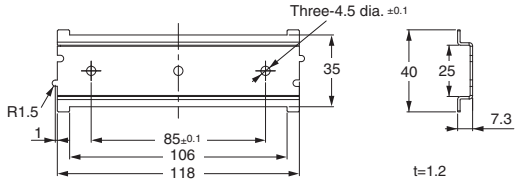	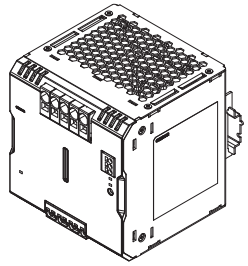

Note: The front mounting bracket can be used for front, side-by-side mounting as well.

DIN Rail Mounting (Order Separately)

Mounting Rail (Material: Aluminum)

PFP-100N
PFP-50N

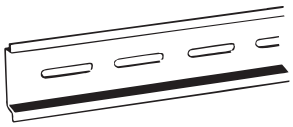

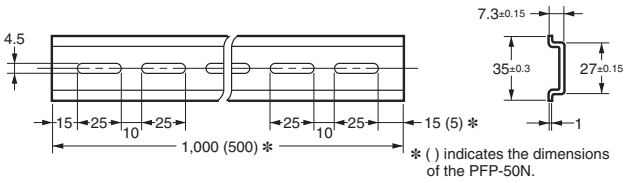

Mounting Rail (Material: Aluminum)

PFP-100N2

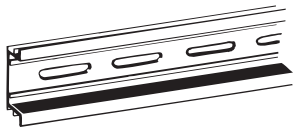

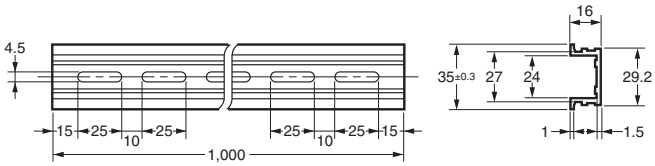

End Plate

PFP-M

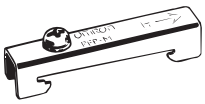

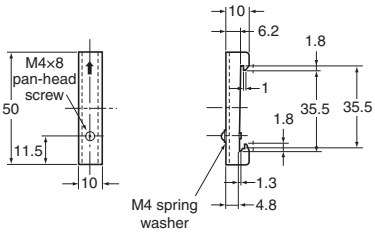

Note: 1. If there is a possibility that the Unit will be subject to vibration or shock, use a steel DIN Rail. Otherwise, metallic filings may result from aluminum abrasion.
2. If the Unit may be subjected to sliding to either side, attach an End Plate (PFP-M) on each side of the Unit.

Safety Precautions

Warning Indications

⚠WARNING	Indicates a potentially hazardous situation which, if not avoided, will result in minor or moderate injury, or may result in serious injury or death. Additionally, there may be significant property damage.
⚠CAUTION	Indicates a potentially hazardous situation which, if not avoided, may result in minor or moderate injury or in property damage.
Precautions for Safe Use	Supplementary comments on what to do or avoid doing, to use the product safely.
Precautions for Correct Use	Supplementary comments on what to do or avoid doing, to prevent failure to operate, malfunction or undesirable effect on product performance.

Meaning of Product Safety Symbols

	Caution against electric shock Used to warn of the risk of electric shock under specific conditions.
	Caution against high temperatures Used to warn of the risk of minor injury caused by high temperatures.
	No disassembly Use to indicate prohibition when there is a risk of minor injury from electrical shock or other source if the product is disassembled.
	General instructions Used for general mandatory action precautions for which there is no specified symbol.

⚠WARNING

Product failure may result in fire or electric shocks. Be sure to use the recommended circuit breaker or fuse. For details, refer to *Recommended circuit breakers and fuses* on page 25.

The electrical wire may come out and an electric shock may be caused. Insert the solid wire or ferrule straight into the terminal block until the end touches the terminal block.

⚠CAUTION

Minor electric shock, fire, or Product failure may occasionally occur. Do not disassemble, modify, or repair the Product or touch the interior of the Product.

Minor burns may occasionally occur. Do not touch the Product while power is being supplied or immediately after power is turned OFF.

Minor injury due to electric shock may occasionally occur. Do not touch the terminals while power is being supplied.

Minor electric shock, fire, or Product failure may occasionally occur. Do not allow any pieces of metal, conductors, or cuttings from installation work to enter the Power Supply.

If the circuit breaker has tripped, or the fuse has blown, there could be a severe failure in the Power Supply. Do not turn the input ON again.

Precautions for Safe Use

Ambient Operating and Storage Environments

- Store the Power Supply at a temperature of -40 to +85°C and a humidity of 95% or less.
- Do not use the Power Supply in areas outside the derating curve as doing so may result in internal parts occasionally deteriorating or being damaged.
- Use the Power Supply at a humidity of 95% max.
- Do not use the Power Supply in locations subject to direct sunlight.
- Do not use locations where liquids, foreign matter, or corrosive gases may enter the interior of the Product.

Installation Environment

- Do not use the Product in locations subject to shocks or vibrations. In particular, install the Power Supply as far away as possible from contactors or other devices that are a vibration source.
- Install the Power Supply well away from any sources of strong, high-frequency noise and surge.
- Do not use an inverter output for the product. Inverters with an output frequency of 50/60 Hz are available, but the rise in the internal temperature of the product may result in ignition or burning.
- If the input is connected to a UPS, do not connect a UPS with a square-wave output. Doing so will cause the internal temperature of the product to increase, possibly causing smoking or burning.

Mounting

- Take adequate measures to ensure proper heat dissipation to increase the long-term reliability of the Power Supply.
  Be sure to allow convection in the atmosphere around devices when mounting. Do not use in locations where the ambient temperature exceeds the range of the derating curve.
- When cutting out holes for mounting, make sure that cuttings do not enter the interior of the Power Supplies.
- The internal parts may occasionally deteriorate and be broken due to adverse heat radiation. Do not loosen the screws on the Power Supply.

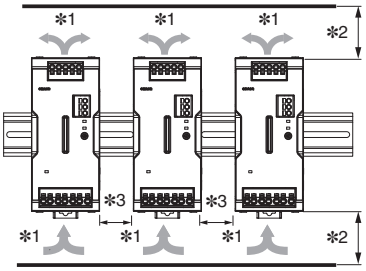

***1.** Convection of air
***2.** Vertical separation: 23 mm or more
***3.** Horizontal separation: 15mm or more (Standard mounting)
Horizontal separation: Less than 15 mm (Front, side-by-side mounting)

- S8VK-W can be used in combinations with a horizontal separation of less than 15 mm (front, side-by-side mounting) only in cases of the same model being used.
  In such cases, use the product in accordance with a derating curve with a horizontal separation of less than 15 mm.

(A) Standard (Vertical) mounting (B) Face-up mounting (C) Front, Side-by-side mounting

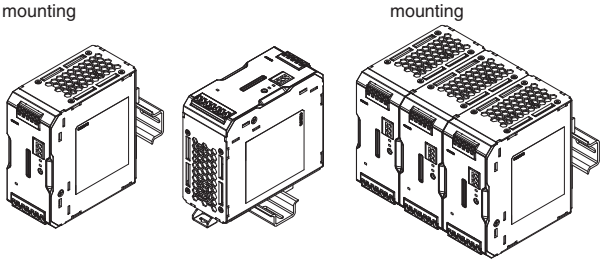

Recommended circuit breakers and fuses

- Product failure may result in fire or electric shocks. Therefore, always use the recommended circuit breaker or fuse.
- To ensure conformance to safety standards, and secure safety of the Unit, connect an input to the Unit via the recommended circuit breakers or fuses indicated in the table below.
- A circuit breaker or fuse can be changed only by the indicated person or skilled person.

Note: For the S8VK-WB, the DC input is not compliant with Safety standards.

Model	Input	Recommended product (per single Unit)
S8VK-WA24024	Three-phase	Circuit breaker: 240 VAC min., 4 to 20 A, Type B, C, or D characteristics
	Single-phase Two-phase	Circuit breaker: 240 VAC min., 4 to 20 A, Type B, C, or D characteristics
	DC	Fuse: Fast-acting type, 350 VDC min., 6 A
S8VK-WA48024	Three-phase	Circuit breaker: 240 VAC min., 4 to 20 A, Type B, C, or D characteristics
	Single-phase Two-phase	Circuit breaker: 240 VAC min., 7 to 20 A, Type B, C, or D characteristics
	DC	Fuse: Fast-acting type, 350 VDC min., 8 A
S8VK-WA96024	Three-phase	Circuit breaker: 240 VAC min., 8 to 20 A, Type B, C, or D characteristics
	Single-phase Two-phase	Circuit breaker: 240 VAC min., 13 to 20 A, Type B, C, or D characteristics
	DC	Fuse: Fast-acting type, 350 VDC min., 15 A
S8VK-WB24024 S8VK-WB24048	Three-phase	Circuit breaker: 480 VAC min., 4 to 20 A, Type B, C, or D characteristics
	Two-phase	Circuit breaker: 480 VAC min., 4 to 20 A, Type B, C, or D characteristics
	DC	Fuse: Fast-acting type, 600 VDC min., 5 A
S8VK-WB48024 S8VK-WB48048	Three-phase	Circuit breaker: 480 VAC min., 4 to 20 A, Type B, C, or D characteristics
	Two-phase	Circuit breaker: 480 VAC min., 4 to 20 A, Type B, C, or D characteristics
	DC	Fuse: Fast-acting type, 600 VDC min., 5 A
S8VK-WB96024 S8VK-WB96048	Three-phase	Circuit breaker: 480 VAC min., 6 to 20 A, Type B, C, or D characteristics
	Two-phase	Circuit breaker: 480 VAC min., 8 to 20 A, Type B, C, or D characteristics
	DC	Fuse: Fast-acting type, 600 VDC min., 8 A

- If multiple Units are used through crossover wiring, select the circuit breaker or fuse in view of the input current and inrush current.

Wiring method

- Connect the input as shown in the figure below.
- In the case of a three-phase four-wire system, do not connect the ground and neutral wire, but connect the other three wires to “L1/+, L2, L3/-”.

Input wiring (TN-S, TN-C, single-phase)

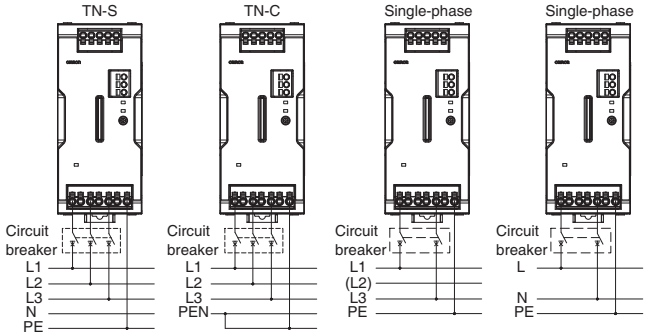

Input wiring (TT, IT, DC)

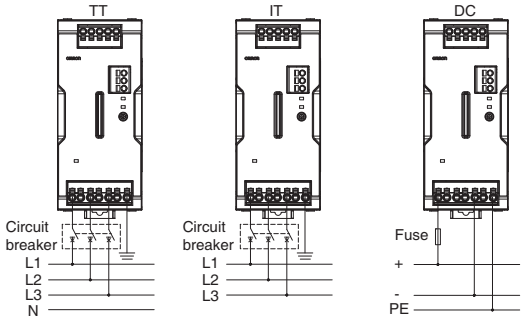

Wiring

- This is the protective earth terminal specified in the safety standards. Connect the ground completely. Electric shock or malfunction may occur if the ground is not connected completely.
- Minor fire may possibly occur. Ensure that DC input and output terminals are wired correctly.
- When you insert wires or insert a screwdriver into a release hole, do not press down on the terminal block with a force of 40 N or greater (100 N or greater for the output terminal block of S8VK-W□960□□ only).
- Do not wire anything to the release holes.
- Do not tilt or twist a flat-blade screwdriver while it is inserted into a release hole on the terminal block. The terminal block may be damaged.
- Insert a flat-blade screwdriver into the release holes at an angle. The terminal block may be damaged if you insert the screwdriver straight in.
- Do not allow the flat-blade screwdriver to fall out while it is inserted into a release hole.
- Do not bend a wire past its natural bending radius or pull on it with excessive force. This may cause a wire to be broken.
- Do not insert more than one wire into each terminal insertion hole.
- Do not pre-solder the ends of the wires. Doing so will inhibit proper connection.
- Be sure to remove the sheet covering the S8M for machining before power-ON so that it does not interfere with heat dissipation.
- If there is a possibility of vibration or shock, please use wires and stranded wires with ferrules.
- Minor fire may occasionally occur.
  Always check the voltage of the equipment when replacing the Unit, and be sure to use a conforming product.
- Use the following material for the wires after confirming the rating of the wires in order to prevent smoking or ignition.
- Use copper stranded or solid wires. However, solid wires can not be used for the S8VK-W□960□□ output terminal.

Recommended Wire Type

Terminal	Model	Recommended wire gauge	
		(mm²)	(AWG)
Input	S8VK-WA24024	0.34 to 2.5	22 to 14
	S8VK-WA48024	0.5 to 2.5	20 to 14
	S8VK-WA96024	0.75 to 2.5	18 to 14
DC Output	S8VK-WA24024	2 to 2.5	14
	S8VK-WA48024	3.5 to 6	12 to 10
	S8VK-WA96024	8 to 16	8 to 6
Signal Output/COM	S8VK-WA□□□24	0.25 to 2.5	24 to 14
PE (protective earth) terminal	S8VK-WA□□□24	2 to 2.5	14

Terminal	Model	Recommended wire gauge	
		(mm²)	(AWG)
Input	S8VK-WB240□□	0.34 to 2.5	22 to 14
	S8VK-WB480□□	0.34 to 2.5	22 to 14
	S8VK-WB960□□	0.5 to 2.5	20 to 14
DC Output	S8VK-WB24024	2 to 2.5	14
	S8VK-WB24048	0.75 to 2.5	18 to 14
	S8VK-WB48024	3.5 to 6	12 to 10
	S8VK-WB48048	2 to 6	14 to 10
	S8VK-WB96024	8 to 16	8 to 6
	S8VK-WB96048	3.5 to 16	12 to 6
Signal Output/COM	S8VK-WB□□□□□	0.25 to 2.5	24 to 14
PE (protective earth) terminal	S8VK-WB□□□□□	2 to 2.5	14

- Input crossover wiring can be used for the input side of this Power Supply.
- Do not use crossover wiring for more than five Power Supplies, and do not allow the steady-state current to the input terminals to exceed 10 A. The above table gives the recommended wires for one Power Supply.
- If you use crossover wiring for N number of Power Supplies, a current that is N times the current for a standalone Power Supply may flow to the input terminals. Take this into consideration when you select wiring materials.
- Use min. 60°C or 60/75°C wire. (Input line only)

Stripping Length

S8VK-WA□□□24: Input Terminals/PE Terminals
S8VK-WA24024: DC Output Terminals

Recommended wire gauge	Stripping Length (Ferrules not used)
0.34 to 1.5 mm²/AWG22 to 16	8 mm
2 to 2.5 mm²/AWG14	10 mm

S8VK-WA48024: DC Output Terminals

Recommended wire gauge	Stripping Length (Ferrules not used)
3.5 to 6 mm²/AWG12 to 10	15 mm

S8VK-WA96024: DC Output Terminals

Recommended wire gauge	Stripping Length (Ferrules not used)
8 to 16 mm²/AWG8 to 6	**18 mm**

S8VK-WA□□□24: Signal Output Terminals/COM Terminals

Recommended wire gauge	Stripping Length (Ferrules not used)
0.25 to 2.5 mm²/AWG24 to 14	10 mm

S8VK-WB□□□□□: Input Terminals/PE Terminals
S8VK-WB240□□: DC Output Terminals

Recommended wire gauge	Stripping Length (Ferrules not used)
0.34 to 1.5 mm²/AWG22 to 16	8 mm
2 to 2.5 mm²/AWG14	10 mm

S8VK-WB480□□: DC Output Terminals

Recommended wire gauge	Stripping Length (Ferrules not used)
3.5 to 6 mm²/AWG12 to 10	15 mm

S8VK-WB960□□: DC Output Terminals

Recommended wire gauge	Stripping Length (Ferrules not used)
8 to 16 mm²/AWG8 to 6	**18 mm**

S8VK-WB□□□□□: Signal Output Terminals/COM Terminals

Recommended wire gauge	Stripping Length (Ferrules not used)
0.25 to 2.5 mm²/AWG24 to 14	10 mm

Indicators/Signal Outputs

- Minor injury due to electric shock may occasionally occur. Do not touch the terminals while power is being supplied. The voltage may be applied even if the INPUT OK indicator does not light. Be sure to check the input voltage when performing wiring.
- The DC OK indicator will light when the output voltage is more than 90% of the rated output voltage, and the internal MOS FET relay is conducted (turned ON).
- The output voltage may be generated even if the DC OK indicator does not light. Be sure to check the output voltage when connecting to the load device.
- This function monitors the voltage at the power output terminals. To check the voltage accurately, measure the voltage at the load end.
- If the output voltage is set to less than 90% of the rated output voltage, the DC OK indicator may go off and the DC OK signal output may be turned OFF.
- The Iout > 100% Indicator may light up, and the Iout > 100% Signal Output may turn ON during peak current operation, however, the Power Supply can be used as long as the operating conditions specified in *Peak current* (P.27) are satisfied.
- During a short-circuit, the indicator will operate intermittently due to the overload protection function. When this happens, the Iout > 100% indicator will blink in accordance with the intermittent operation, and the Iout > 100% signal output will repeatedly turn ON and OFF. The shortest ON time of the Iout > 100% signal output during intermittent operation is 5 ms.

Specifications of the Signal Output Terminals (between DC OK Signal Output Terminal and COM Terminal, and between Iout > 100% Signal Output Terminal and COM Terminal)

Since the Signal Output is composed of the MOS FET relay, it does not have any polarity. 30 VDC max., 50 mA max.
Residual voltage when the function is ON: 2 V max.
Leakage current when the function is OFF: 0.1 mA max.

Note: 1. Internal current control circuits are not provided internally for output signals. Do not allow the output current to exceed 50 mA.
2. After completing wiring, confirm that the circuits operate correctly.

Peak current

The boost current is a temporary current that exceeds the rated current.
However, it should meet the following four boost current conditions.

- Time that the boost current flows: t1 ≤ 10 s
- The boost current: Ip ≤ Maximum boost current
- The average output current: Iave ≤ Rated output current
- The time ratio of the boost current flow: Duty ≤ 30%

$$\text{Duty} = \frac{t1}{t1 + t2} \times 100\ [\%] \leq 30\%$$

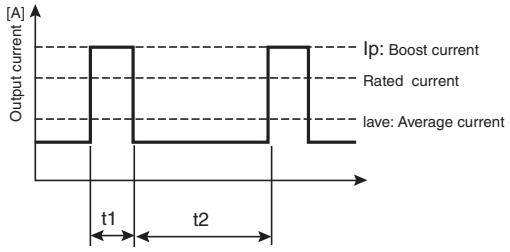

- Do not allow the peak current to continue for more than 10 seconds. Do not allow the duty to exceed 30%. The Power Supply may be damaged.
- Ensure that the average current of one cycle of the boost current does not exceed the specified value. The product may be damaged.
- Derate the load at the boost current and average output current according to the ambient operating temperature and mounting.

Charging a Battery

If you connect a battery as the load, install overcurrent control and overvoltage protection circuits.

Output voltage adjuster (V.ADJ)

- The output voltage adjuster (V.ADJ.) may possibly become damaged. Do not apply more than the required force.
- After completing output voltage adjustment, be sure that the output power or output current does not exceed the rated output electric power or rated output current.

Series Operation

Two Power Supplies can be connected in series.

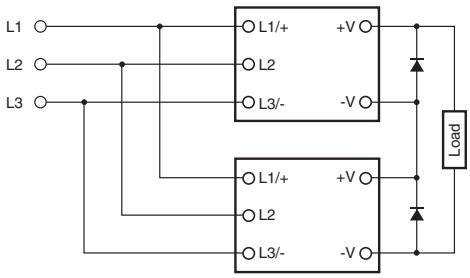

Note: 1. If the load is short-circuited, a reverse voltage will be generated inside the Power Supply. If this occurs the product may possibly deteriorate or be damaged. Always connect a diode as shown in the figure. Select diodes with the following ratings.

Type	Schottky Barrier diode
Dielectric strength (V_{RRM})	Twice the output voltage or above
Forward current (I_F)	Twice the rated output current or above

2. Though Power Supplies having different specifications can be connected in series, the current flowing through the load must not exceed the smaller rated output current.
Be sure to check that the Iout > 100% indicator is not lit or the Iout > 100% signal output is turned OFF before using.

<Making Positive/Negative Outputs>

- The outputs are floating outputs (i.e., the primary circuits and secondary circuits are separated). You can therefore make positive and negative outputs by using two Power Supplies. You can make positive/negative outputs with any of the models.
If positive and negative outputs are used, connect Power Supplies of the same model as in the following figure. (Combinations with different output capacities or output voltages can be made. However, use the lower of the two maximum rated output currents as the current to the loads.)

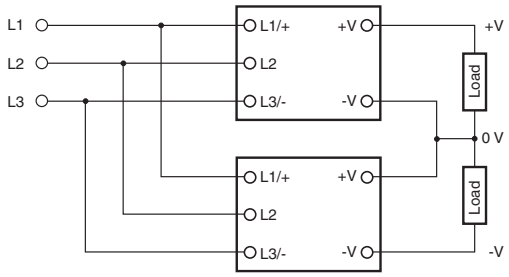

- Depending on the model, internal circuits may be damaged due to startup failure when the power is turned ON if loads such as a servomotor or operational amplifier may operate in series. Therefore, connect bypass diodes (D_1, D_2) as shown in the following figure.

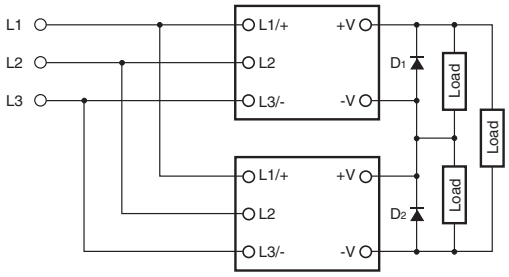

- Use the following information as a guide to the diode type, dialectic strength, and current.

Type	Schottky Barrier diode
Dielectric strength (V_{RRM})	Twice the output voltage or above
Forward current (I_F)	Twice the rated output current or above

Parallel Operation

Parallel operation is used when the output current from one Power Supply is insufficient for the load. Power Supplies are connected in parallel to increase the output current. Two Power Supplies with the same capacity can be connected in parallel.
You must meet the following conditions to use parallel operation.

- Standard mounting.
- Ambient temperature: -25 to +40°C
- Horizontal separation: 15 mm or more, Vertical separation: 23 mm or more
- Rated input voltage range
  Output voltage of 25 V max. (S8VK-W□□□□24)
  Output voltage of 49 V max. (S8VK-WB□□□48)

- Adjust the output voltage difference of each Power Supply to 50 mV or less, using the output voltage adjuster (V. ADJ).
- There is no current balancing function for S8VK-X. A high output voltage unit may work at overcurrent state and in this situation, a life of a Power Supply will be extremely short. After adjusting the output voltage, confirm the output current of the Power Supplies balances.
- For Parallel Operation, to balance the current of the each unit, the length and thickness of each wire connected to the load and each unit must be same as much as possible.
- The output voltage may drop by several volts if the load changes rapidly (e.g., if the load starts or is disconnected). Use the S8VK-R or connect external diodes as shown in the figure.
  For parallel operation with 240 W Power Supplies or S8VK-WB48048, use the S8VK-R20.
- Do not use parallel operation when there is the possibility that the input voltage will vary outside of the rated input range.

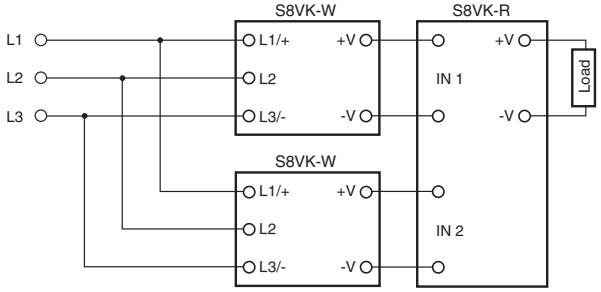

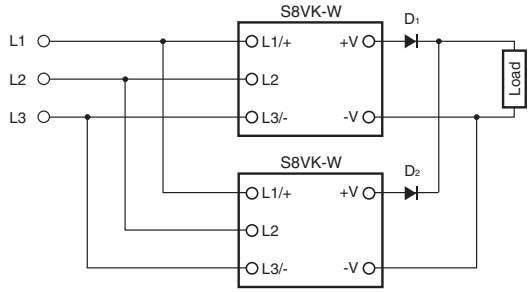

- Use the following information as a guide to the diode type, dialectic strength, and current.

Type	Schottky Barrier diode
Dielectric strength (V_{RRM})	Twice the output voltage or above
Forward current (I_F)	Twice the rated output current or above

- Increase the output voltage setting of the Power Supplies by the drop in the forward voltage (V_F) of diodes D1 and D2. Also, the diodes will cause a power loss equivalent to the Power Supply output current (I_{OUT}) times the diode forward voltage (V_F). Therefore, cooling measures must be implemented so that the temperature of the diodes decreases to the catalog value or lower.
- Because of the load power and power loss due to the diodes, do not exceed the rated power of one Power Supply (rated output voltage × rated output current).

<Backup Operation>

Backup operation is possible if you use two Power Supplies of the same model.
Even if one Power Supply fails, operation can be continued with the other Power Supply.
Make sure that the maximum load does not exceed the capacity of one Power Supply.
Use the S8VK-R or connect external diodes.
For backup operation with 240 W Power Supplies or S8VK-WB48048, use the S8VK-R20.

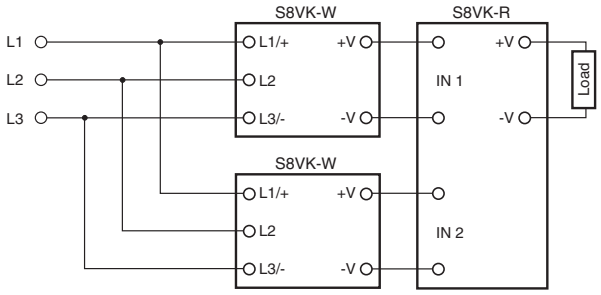

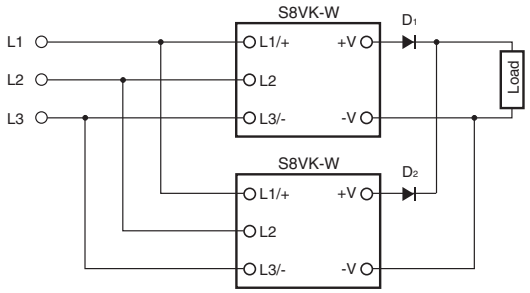

- Use the following information as a guide to the diode type, dialectic strength, and current.

Type	Schottky Barrier diode
Dielectric strength (V_{RRM})	Twice the output voltage or above
Forward current (I_F)	Twice the rated output current or above

- Increase the output voltage setting of the Power Supplies by the drop in the forward voltage (V_F) of diodes D1 and D2. Also, the diodes will cause a power loss equivalent to the Power Supply output current (I_{OUT}) times the diode forward voltage (V_F). Therefore, cooling measures must be implemented so that the temperature of the diodes decreases to the catalog value or lower.
- Because of the load power and power loss due to the diodes, do not exceed the rated power of one Power Supply (rated output voltage × rated output current).

Precautions for Correct Use

DIN rail mounting

To mounting on a DIN Rail, hook portion (A) of the Block onto the rail and press in the (B) direction.

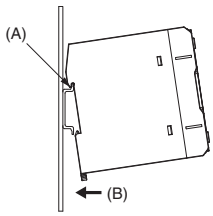

To dismount the Block, pull down portion (C) with a flat-blade screwdriver and pull out the Block.

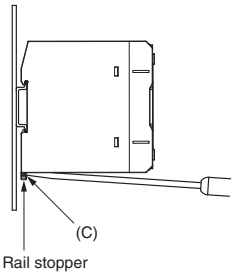

Connecting Wires to the Push-In Plus Terminal Block

Part Names of the Terminal Block

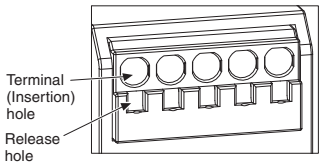

Connecting Wires with Ferrules and Solid Wires

Insert the solid wire or ferrule straight into the terminal block until the end touches the terminal block.

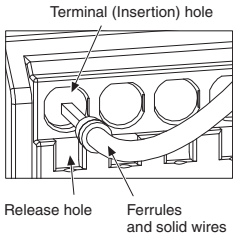

- If a wire is difficult to connect because it is too thin, use a flat-blade screwdriver in the same way as when connecting stranded wire.

Connecting Stranded Wires

Use the following procedure to connect the wires to the terminal block.

1. Hold a flat-blade screwdriver at an angle and insert it into the release hole.
   The angle should be between 10° and 15°. If the flat-blade screwdriver is inserted correctly, you will feel the spring in the release hole.
2. With the flat-blade screwdriver still inserted into the release hole, insert the wire into the terminal hole until it strikes the terminal block.
3. Remove the flat-blade screwdriver from the release hole.

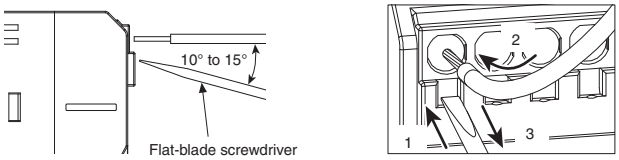

Checking Connections

- After the insertion, pull gently on the wire to make sure that it will not come off and the wire is securely fastened to the terminal block
- The insulation distance is still satisfied although some of the conductor may still be visible after being inserted into the terminal block, even though recommended ferrules are used.

Removing Wires from the Push-In Plus Terminal Block

Use the following procedure to remove wires from the terminal block. The same method is used to remove stranded wires, solid wires, and ferrules.

1. Hold a flat-blade screwdriver at an angle and insert it into the release hole.
2. With the flat-blade screwdriver still inserted into the release hole, remove the wire from the terminal insertion hole.
3. Remove the flat-blade screwdriver from the release hole.

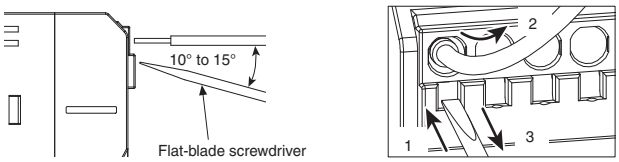

Recommended Ferrules and Crimping Tools

Recommended Ferrules

S8VK-W□□□□□□: Input Terminals/PE Terminals
S8VK-W□□240□: DC Output Terminals
S8VK-W□□□□□□:
Signal Output Terminals/COM Terminals

Applicable wire		Ferrule Conductor length (mm)	Stripping length (mm) (Ferrules used)	Recommended Ferrules		
(mm²)	(AWG)			Phoenix Contact	Weid muller	Wago
0.25	24	8	10	AI 0, 25-8	H0.25/12	FE-0.25-8N-YE
		10	12	AI 0, 25-10	---	---
0.34	22	8	10	AI 0,34-8	H0.34/12	FE-0.34-8N-TQ
		10	12	AI 0,34-10	---	---
0.50	20	8	10	AI 0,5-8	H0.5/14	FE-0.5-8N-WH
		10	12	AI 0,5-10	H0.5/16	FE-0.5-10N-WH
0.75	18	8	10	AI 0,75-8	H0.75/14	FE-0.75-8N-GY
		10	12	AI 0,75-10	H0.75/16	FE-0.75-10N-GY
1/1.25	18/17	8	10	AI 1-8	H1.0/14	FE-1.0-8N-RD
		10	12	AI 1-10	H1.0/16	FE-1.0-10N-RD
1.25/1.5	17/16	8	10	AI 1,5-8	H1.5/14	FE-1.5-8N-BK
		10	12	AI 1,5-10	H1.5/16	FE-1.5-10N-BK
2.5	14	10	12	AI 2, 5-10	H2.5/16DS	FE-2.5-10N-BU
Recommended crimp tool				CRIMPFOX6 CRIMPFOX6T-F CRIMPFOX10S	PZ6 roto	Variocrimp4

Note: 1. Make sure that the outer diameter of the wire is smaller than the inner diameter of the insulating sleeve of the recommended ferrule.
2. Make sure that the ferrule processing dimensions conform to the following figure.

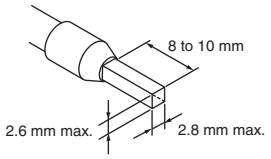

S8VK-W□480□□: DC Output Terminals

Applicable wire		Ferrule Conductor length (mm)	Stripping length (mm) (Ferrules used)	Recommended Ferrules		
(mm²)	(AWG)			Phoenix Contact	Weid muller	Wago
4	12	12	14	AI 4-12	H4.0/20D	FE-4.0-12N-GY
6	10	12	16	AI 6-12	H6.0/20	FE-6.0-12N-YE ✻
Recommended crimp tool				CRIMPFOX6 CRIMPFOX6T-F CRIMPFOX10S	PZ6 roto	Variocrimp4 ✻ Use the Variocrimp16.

Note: 1. Make sure that the outer diameter of the wire is smaller than the inner diameter of the insulating sleeve of the recommended ferrule.
2. Make sure that the ferrule processing dimensions conform to the following figure.

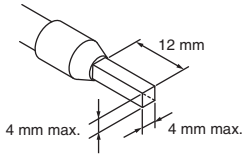

S8VK-W□960□□: DC Output Terminals

Applicable wire		Ferrule Conductor length (mm)	Stripping length (mm) (Ferrules used)	Recommended Ferrules		
(mm²)	(AWG)			Phoenix Contact	Weid muller	Wago
10	8	18	21	AI 10-18	H10.0/28	FE-10.0-18N-RD
Recommended crimp tool				CRIMPFOX10S (0.14 to 10mm²) CRIMPFOX 25R (10 to 25mm²)	PZ 16 (6 to 16mm²)	Variocrimp16 (6 to 16mm²) 205-225 (10 to 25mm²)

Note: 1. Make sure that the outer diameter of the wire is smaller than the inner diameter of the insulating sleeve of the recommended ferrule.
2. Make sure that the ferrule processing dimensions conform to the following figure.

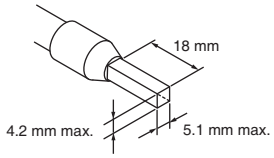

Recommended Flat-blade Screwdriver

Use a flat-blade screwdriver to connect and remove wires. Use the following flat-blade screwdrivers.
The following table shows manufacturers and models as of 2018/Dec.
S8VK-W□□□□□□: Input terminals/Protective Earth terminal
S8VK-W□240□□ : DC Output Terminals
S8VK-W□480□□ : DC Output Terminals
S8VK-W□□□□□□: Signal Output terminal/COM Terminal

Model	Manufacturer
ESD 0,40×2,5	Wera
SZS 0,4×2,5 SZF 0-0,4×2,5 ✻	Phoenix Contact
0.4×2.5×75 302	Wiha
AEF.2,5×75	Facom
210/-719	Wago
SDIS 0.4×2.5×75	Weidmuller
9900(-2.5×75)	Vessel

✻ OMRON's exclusive purchase XW4Z-00B is available to order as SZF 0-0,4×2,5 (manufactured by Phoenix Contact).

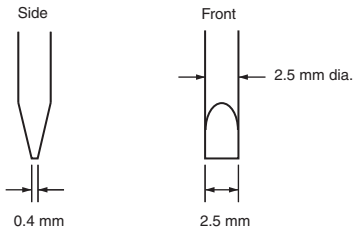

S8VK-W□960□□ : DC Output Terminals

Model	Manufacturer
ESD 0,80×4,0	Wera
SZF 2-0,8×4,0	Phoenix Contact
302S4010	Wiha
AEF.4×75	Facom
SDS 0.8×4×100	Weidmuller
1-65-017	STANLEY
990 4×100	Vessel

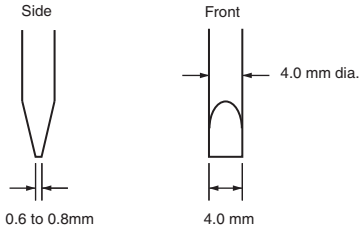

Audible Noise at Power ON

A harmonic current suppression circuit is built into the Power Supply. This circuit can create noise when the input is turned ON, but it will last only until the internal circuits stabilize and does not indicate any problem in the Product.

In Case There Is No Output Voltage

The possible cause for no output voltage may be that the overload protection or overvoltage protection has operated. The internal protection may operate if a large amount of surge voltage, such as a lightning inrush, is applied to the input.
In case there is no output voltage, please check the following points before contacting us:

Checking overload protected status:

Check whether the load is in overload status or is short-circuited. Remove the load wires when checking. Can be checked depending on whether or not the Iout > 100% indicator is lit, or from the operating status of the Iout > 100% signal output.

Checking overvoltage or internal protection:

Switch off the input power supply, and switch back on after at least 3 minutes have elapsed.

Disposal

When disposing of the product, treat it as industrial waste.

Warranty and Limitations of Liability

WARRANTY
The Power Supply warranty is valid for a period of five years from the date of shipment from the factory.
LIMITATIONS OF LIABILITY
The warranty is valid only for the following operating conditions.
1. Average ambient operating temperature of the Power Supply: 40°C max.
2. Average load rate of 80% max.
3.Mounting method: Standard mounting
Note: The maximum ratings must be within the derating curve.

If the Power Supply fails for reasons attributable to OMRON within the above warranty period, OMRON will repair or replace the faulty part of the Power Supply at the place of purchase or the place where the Power Supply delivered without charge.
This warranty does not cover the following types of failures.

1. Failures that result from handling or operation of the product under conditions or in environments that are not given in this document and not given in any other specifications exchanged between OMRON and the customer.
2. Failures that originate in causes other than the delivered product itself
3. Failures caused by disassembly, modification, or repair of the Power Supply by anyone other than OMRON
4. Failures caused by applications or uses for which the product was not originally intended.
5. Failures caused by factors that could not be anticipated with the scientific or technical knowledge available when the Power Supply was shipped.
6. Failures caused by other causes for which OMRON is not responsible, such as natural disasters and other acts of God.
   This warranty is limited to the individual Power Supply that was delivered and does not cover any secondary, subsequent, or related damages.

Recommended Replacement Periods and Periodic Replacement for Preventive Maintenance

The recommended replacement period for preventive maintenance is greatly influenced by the installation environment of the Power Supply. As a guideline, the recommended replacement period is 7 to 10 years.✻
To prevent failures or accidents that can be caused by using a Power Supply beyond its service live, we recommend that you replace the Power Supply as early as possible within the recommended replacement period. However, bear in mind that the recommended replacement period is for reference only and does not guarantee the life of the Power Supply.

Many electronic components are used in the Power Supply and the Power Supply depends on the correct operation of these components to achieve the original Power Supply functions and performance. However, the influence of the ambient temperature on aluminum electrolytic capacitors is large, and the service life is reduced by half for each 10°C rise in temperature (Arrhenius law). When the capacity reduction life of the electrolytic capacitor is reached, the Power Supply failures or accidents may occur. We therefore recommend that you replace the Power Supply periodically to minimize product failures or accidents in advance.
✻ The recommended replacement period applies under the following conditions: rated input voltage, load rate of 50% max., ambient temperature of 40°C max., and the standard mounting method.
This product model is designed with a service life of 10 years minimum under the above conditions.

Terms and Conditions Agreement

Read and understand this catalog.

Please read and understand this catalog before purchasing the products. Please consult your OMRON representative if you have any questions or comments.

Warranties.

(a) Exclusive Warranty. Omron's exclusive warranty is that the Products will be free from defects in materials and workmanship for a period of twelve months from the date of sale by Omron (or such other period expressed in writing by Omron). Omron disclaims all other warranties, express or implied.

(b) Limitations. OMRON MAKES NO WARRANTY OR REPRESENTATION, EXPRESS OR IMPLIED, ABOUT NON-INFRINGEMENT, MERCHANTABILITY OR FITNESS FOR A PARTICULAR PURPOSE OF THE PRODUCTS. BUYER ACKNOWLEDGES THAT IT ALONE HAS DETERMINED THAT THE PRODUCTS WILL SUITABLY MEET THE REQUIREMENTS OF THEIR INTENDED USE.

Omron further disclaims all warranties and responsibility of any type for claims or expenses based on infringement by the Products or otherwise of any intellectual property right. (c) Buyer Remedy. Omron's sole obligation hereunder shall be, at Omron's election, to (i) replace (in the form originally shipped with Buyer responsible for labor charges for removal or replacement thereof) the non-complying Product, (ii) repair the non-complying Product, or (iii) repay or credit Buyer an amount equal to the purchase price of the non-complying Product; provided that in no event shall Omron be responsible for warranty, repair, indemnity or any other claims or expenses regarding the Products unless Omron's analysis confirms that the Products were properly handled, stored, installed and maintained and not subject to contamination, abuse, misuse or inappropriate modification. Return of any Products by Buyer must be approved in writing by Omron before shipment. Omron Companies shall not be liable for the suitability or unsuitability or the results from the use of Products in combination with any electrical or electronic components, circuits, system assemblies or any other materials or substances or environments. Any advice, recommendations or information given orally or in writing, are not to be construed as an amendment or addition to the above warranty.

See http://www.omron.com/global/ or contact your Omron representative for published information.

Limitation on Liability; Etc.

OMRON COMPANIES SHALL NOT BE LIABLE FOR SPECIAL, INDIRECT, INCIDENTAL, OR CONSEQUENTIAL DAMAGES, LOSS OF PROFITS OR PRODUCTION OR COMMERCIAL LOSS IN ANY WAY CONNECTED WITH THE PRODUCTS, WHETHER SUCH CLAIM IS BASED IN CONTRACT, WARRANTY, NEGLIGENCE OR STRICT LIABILITY.

Further, in no event shall liability of Omron Companies exceed the individual price of the Product on which liability is asserted.

Suitability of Use.

Omron Companies shall not be responsible for conformity with any standards, codes or regulations which apply to the combination of the Product in the Buyer's application or use of the Product. At Buyer's request, Omron will provide applicable third party certification documents identifying ratings and limitations of use which apply to the Product. This information by itself is not sufficient for a complete determination of the suitability of the Product in combination with the end product, machine, system, or other application or use. Buyer shall be solely responsible for determining appropriateness of the particular Product with respect to Buyer's application, product or system. Buyer shall take application responsibility in all cases.

NEVER USE THE PRODUCT FOR AN APPLICATION INVOLVING SERIOUS RISK TO LIFE OR PROPERTY OR IN LARGE QUANTITIES WITHOUT ENSURING THAT THE SYSTEM AS A WHOLE HAS BEEN DESIGNED TO ADDRESS THE RISKS, AND THAT THE OMRON PRODUCT(S) IS PROPERLY RATED AND INSTALLED FOR THE INTENDED USE WITHIN THE OVERALL EQUIPMENT OR SYSTEM.

Programmable Products.

Omron Companies shall not be responsible for the user's programming of a programmable Product, or any consequence thereof.

Performance Data.

Data presented in Omron Company websites, catalogs and other materials is provided as a guide for the user in determining suitability and does not constitute a warranty. It may represent the result of Omron's test conditions, and the user must correlate it to actual application requirements. Actual performance is subject to the Omron's Warranty and Limitations of Liability.

Change in Specifications.

Product specifications and accessories may be changed at any time based on improvements and other reasons. It is our practice to change part numbers when published ratings or features are changed, or when significant construction changes are made. However, some specifications of the Product may be changed without any notice. When in doubt, special part numbers may be assigned to fix or establish key specifications for your application. Please consult with your Omron's representative at any time to confirm actual specifications of purchased Product.

Errors and Omissions.

Information presented by Omron Companies has been checked and is believed to be accurate; however, no responsibility is assumed for clerical, typographical or proofreading errors or omissions.

OMRON Corporation **Industrial Automation Company**
Kyoto, JAPAN
Contact: www.ia.omron.com

Regional Headquarters
OMRON EUROPE B.V.
Wegalaan 67-69, 2132 JD Hoofddorp
The Netherlands
Tel: (31)2356-81-300/Fax: (31)2356-81-388

OMRON ELECTRONICS LLC
2895 Greenspoint Parkway, Suite 200
Hoffman Estates, IL 60169 U.S.A.
Tel: (1) 847-843-7900/Fax: (1) 847-843-7787

OMRON ASIA PACIFIC PTE. LTD.
No. 438A Alexandra Road # 05-05/08 (Lobby 2),
Alexandra Technopark,
Singapore 119967
Tel: (65) 6835-3011/Fax: (65) 6835-2711

OMRON (CHINA) CO., LTD.
Room 2211, Bank of China Tower,
200 Yin Cheng Zhong Road,
PuDong New Area, Shanghai, 200120, China
Tel: (86) 21-5037-2222/Fax: (86) 21-5037-2200

Authorized Distributor:

© OMRON Corporation 2018-2020 All Rights Reserved.
In the interest of product improvement,
specifications are subject to change without notice.

Cat. No. T219-E1-06 1220 (1018)