Diffuse sensors (Intensity difference), rectangular, plastic

FZCK 07N6901/KS35A

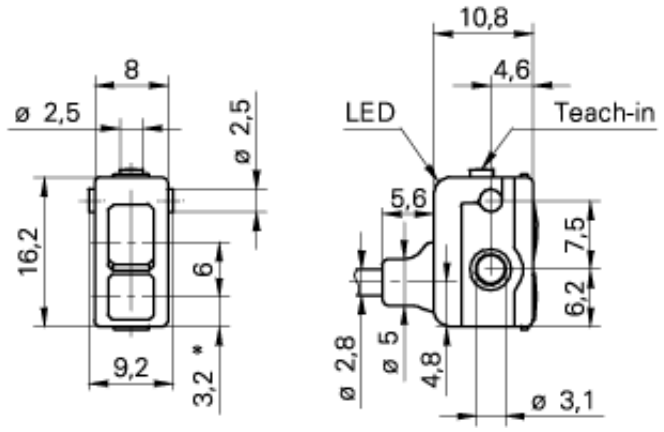

* emitter axis

Technical Data	
function	intensity difference
sensing distance Tw	20 - 150 mm
sensing range Tb (at Tw min)	-
sensing range Tb (at Tw max)	-
output	NPN
output state	light/dark operate
housing style	rectangular
width /diameter	8 mm
height	16,2 mm
depth	10,8 mm
housing material	plastic (PMMA, MABS, PA)
connection	flylead connector
operating range	-
beam focal point	-
repeatability	-
min. detectable contrast	-
output indicator	LED green
alignment aid / soiled lens indicator	flashing LED
light source	pulsed red diode
wave length	660 nm
laser class	-
voltage supply range +Vs	10 - 30 V
supply voltage	DC
supply current average/peak value	20 / 25 mA
switching current	< 100 mA
voltage drop	< 1,8 VDC
response time / release time	< 0,5 ms
sensitivity adjustable	teach-in button
short circuit protection	yes
reverse polarity protection	yes
temperature range	-20 ... +50 °C
protection class	IP 65
connectors	ESW 31A, ESG 32A

photo

connection diagram

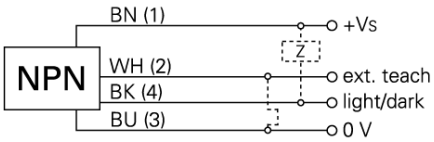

sensitivity adjustable: via Teach-in or Teach-in wire input