Retro-reflective laser sensors (Polarization filter), rectangular, metal
OPDM 16P5103

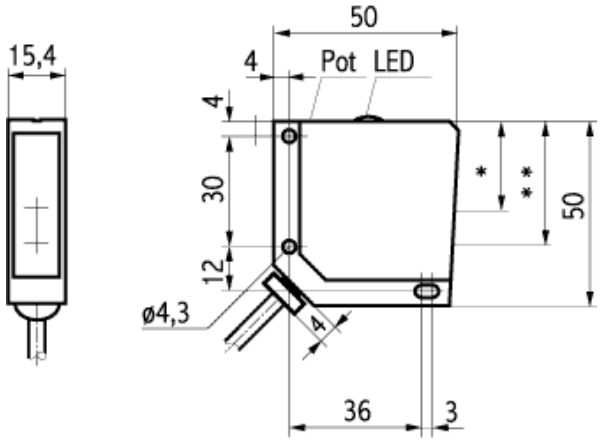

* emitter axis 21,5 mm
** receiver axis 28 mm

Technical Data	
polarization filter	-
function	retro-reflective laser sensor
emitter / receiver	-
output	PNP
output state	light/dark operate
housing style	rectangular
width /diameter	15,4 mm
height	50 mm
depth	50 mm
housing material	die-cast zinc
connection	cable
nominal range Sn	0 - 1,3 m
actual range Sb	0 - 1 m
beam focal point	80 mm
repeatability	< 0,1 mm at laser focus
output indicator	LED yellow
alignment aid / soiled lens indicator	flashing LED
wave length	675 nm
light source	pulsed red laser diode
laser class (norm)	1 (IEC 825-1/1996)
voltage supply range +Vs	10 - 30 VDC
supply current average/peak value	60 / 70 mA
switching current	< 200 mA
voltage drop	< 1,8 VDC
response time / release time	< 0,1 ms
automatic adjustment time	-
min. pulse length teach signal	-
sensitivity adjustable	Pot, 270°
short circuit protection	yes
reverse polarity protection	yes
temperature range	-10 ... +50 °C
protection class	IP 67
connectors	none

photo
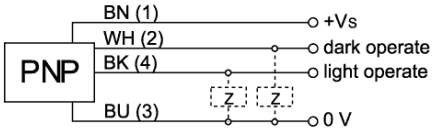
connection diagram