Through beam sensors (Receiver), rectangular, plastic
FEDK 07N6901

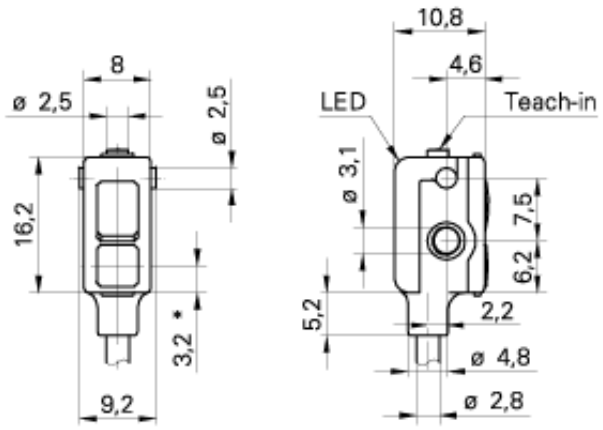

* receiver axis

Technical Data	
polarization filter	-
function	through beam sensor
emitter / receiver	receiver
output	NPN
output state	light/dark operate
housing style	rectangular
width /diameter	8 mm
height	16,2 mm
depth	10,8 mm
housing material	plastic (PMMA, MABS, PA)
connection	cable bottom side
nominal range Sn	0 - 2,5 m
actual range Sb	0 - 2 m
beam focal point	-
repeatability	-
output indicator	LED green
alignment aid / soiled lens indicator	flashing LED
wave length	-
light source	-
laser class (norm)	-
voltage supply range +Vs	10 - 30 VDC
supply current average/peak value	20 / 20 mA
switching current	< 100 mA
voltage drop	< 1,8 VDC
response time / release time	< 0,5 ms
automatic adjustment time	-
min. pulse length teach signal	-
sensitivity adjustable	teach-in
short circuit protection	yes
reverse polarity protection	yes
temperature range	-20 ... +50 °C
protection class	IP 65
connectors	none

photo

connection diagram

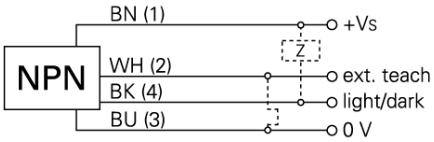

sensitivity adjustable: via Teach-in or Teach-in wire input